SECTION 3
V-PLOWS

MODELS: 29851, 29951, 29860, 29960

PAGE 2, 3	MOLDBOARD ASSEMBLIES - MODELS 29851 / 29951
PAGE 4, 5	MOLDBOARD ASSEMBLIES - MODELS 29860 / 29960
PAGE 6	FRAME ASSEMBLY
PAGE 7	HYDRAULIC OVERVIEW 2 1/4 X 10 HYDRAULIC CYLINDER
PAGE 8	VALVE MANIFOLD ELECTRICAL WIRING
PAGE 9	POLY SNOW DEFLECTOR KIT RUBBER SNOW DEFLECTOR KIT
PAGE 10	WEAR PLATE KIT CURB GUARD KITS
PAGE 11	CUTTING EDGE KITS BOX END WINGS

MOLDBOARD ASSEMBLIES
MODELS: 29851 / 29951

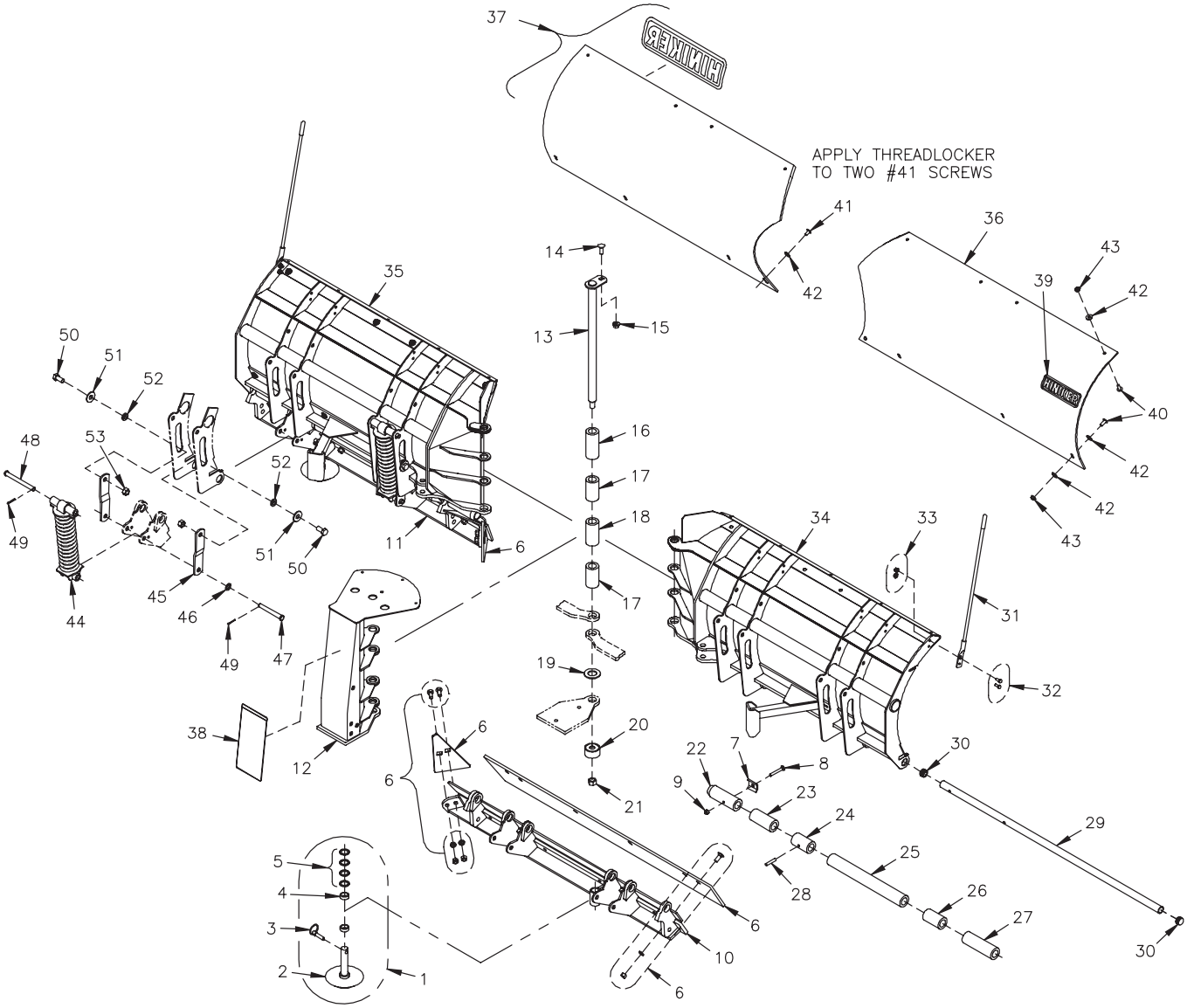

25013007 8 1/2' Moldboard Assembly
25013009 9 1/2' Moldboard Assembly

DWG. NO. 6739

SKID STEER V-PLOW SNOWPLOW

REF. NO.	PART NUMBER	DESCRIPTION	QTY.
1	25012297	Skid Assembly	2
2	25012316	Cast Skid Shoe	2
3	25010319	Lynch Pin	2
4	25010048	1/2” Spacer	4
5	952-004-071	Machinery Bushing	8
6	25013298	Cutting Edge Kit 8 1/2’ Plow 1/2” Thk (See Sec.3 P.11)	1
	25013299	Cutting Edge Kit 9 1/2’ Plow 1/2” Thk (See Sec.3 P.11)	1
7	25013240	Stop Plate	2
8	030-16075	Carriage Bolt 3/8-16 X 2 3/4 Gr. 5	2
9	951-003-002	Lock Nut 3/8-16 Nylon Insert	2
10	25013018	RH Trip Edge Weldment, 8 1/2’ Plow	1
	25013049	RH Trip Edge Weldment, 9 1/2’ Plow	1
11	25013019	LH Trip Edge Weldment, 8 1/2’ Plow	1
	25013050	LH Trip Edge Weldment, 9 1/2’ Plow	1
12	25012307	Center Mast Weldment	1
13	25012304	Hinge Pin Weldment	1
14	030-16130	Carriage Bolt 1/2-13 x 1 Gr. 5	1
15	951-005-055	Lock Nut 1/2-13 Mac Lock	1
16	25012301	Bushing, 4 11/16” Long	1
17	25011442	Bushing, 3 17/32” Long	2
18	25012302	Bushing 4” Long	1
19	033-11017	SAE Flat Washer, 1 1/4 Inch	1
20	25012303	Washer Weldment	1
21	951-005-037	Lock Nut 3/4-10, 2-Way	1
22	25013239	Bushing 5 7/8” Long	2
23	25013023	Bushing 4 3/8” Long	2
24	25011341	Bushing 3 3/8” Long, Steel	2
25	25013022	Bushing 15 15/16” Long, 8 1/2’ Plow	2
	25013042	Bushing 21 15/16” Long, 9 1/2’ Plow	2
26	25011338	Bushing 3 3/8” Long	2
27	25013021	Bushing 6 1/4” Long	2
28	30009024	Slotted Spring Pin 3/8 x 2	2
29	25013242	Trip Pin 8 1/2’ Plow	2
	25013241	Trip Pin 9 1/2’ Plow	2
30	25012375	End Cap	4
31	25010118	Blade Guide	2
32	950-001-110	Hex Head Cap Screw 5/16-18 x 1 Gr. 5	4
33	951-005-036	Lock Nut 5/16-18 Mac Lock	4
34	25013016	RH Wing Frame Weldment, 8 1/2’ Plow	1
	25013044	RH Wing Frame Weldment, 9 1/2’ Plow	1
35	25013017	LH Wing Frame Weldment, 8 1/2’ Plow	1
	25013045	LH Wing Frame Weldment, 9 1/2’ Plow	1
36	25012380	Poly Moldboard Blank 8 1/2’ Plow	1
	25012322	Poly Moldboard Blank 9 1/2’ Plow	1
37	25012295	Poly Blank/Logo Decal Assembly 8 1/2’ Plow	1
	25012298	Poly Blank/Logo Decal Assembly 9 1/2’ Plow	1
38	25013502	Decal - Removal	1
39	25011684	Decal - Hiniker	1
40	700-11704	Machine Screw 3/8-16 x 1 Slotted Truss Head	14
41	950-004-108	Machine Screw 3/8-16 x 3/4 Slotted Truss Head	2
42	952-002-013	Flat Washer 3/8 Inch, Stainless Steel	22
43	951-005-003	Lock Nut 3/8-16 Mac Lock	14
44	25011373	Spring Assembly	4
45	25012306	Strap	8
46	952-004-040	Machinery Bushing 21/32 x 1 1/8 x .048	4
47	953-002-049	Clevis Pin 5/8 x 4 3/4	4
48	953-002-045	Clevis Pin 5/8 x 6	4
49	035-42033	Cotter Pin 5/32 x 1 1/4	8
50	031-06302	Hex Head Cap Screw 5/8-11 x 1 1/4 Gr. 5	8
51	952-002-007	Flat Washer 5/8 Inch	8
52	25012305	Bushing	8
53	951-005-044	Lock Nut 5/8-11, 2-Way	8

MOLDBOARD ASSEMBLIES
MODELS: 29860 / 29960

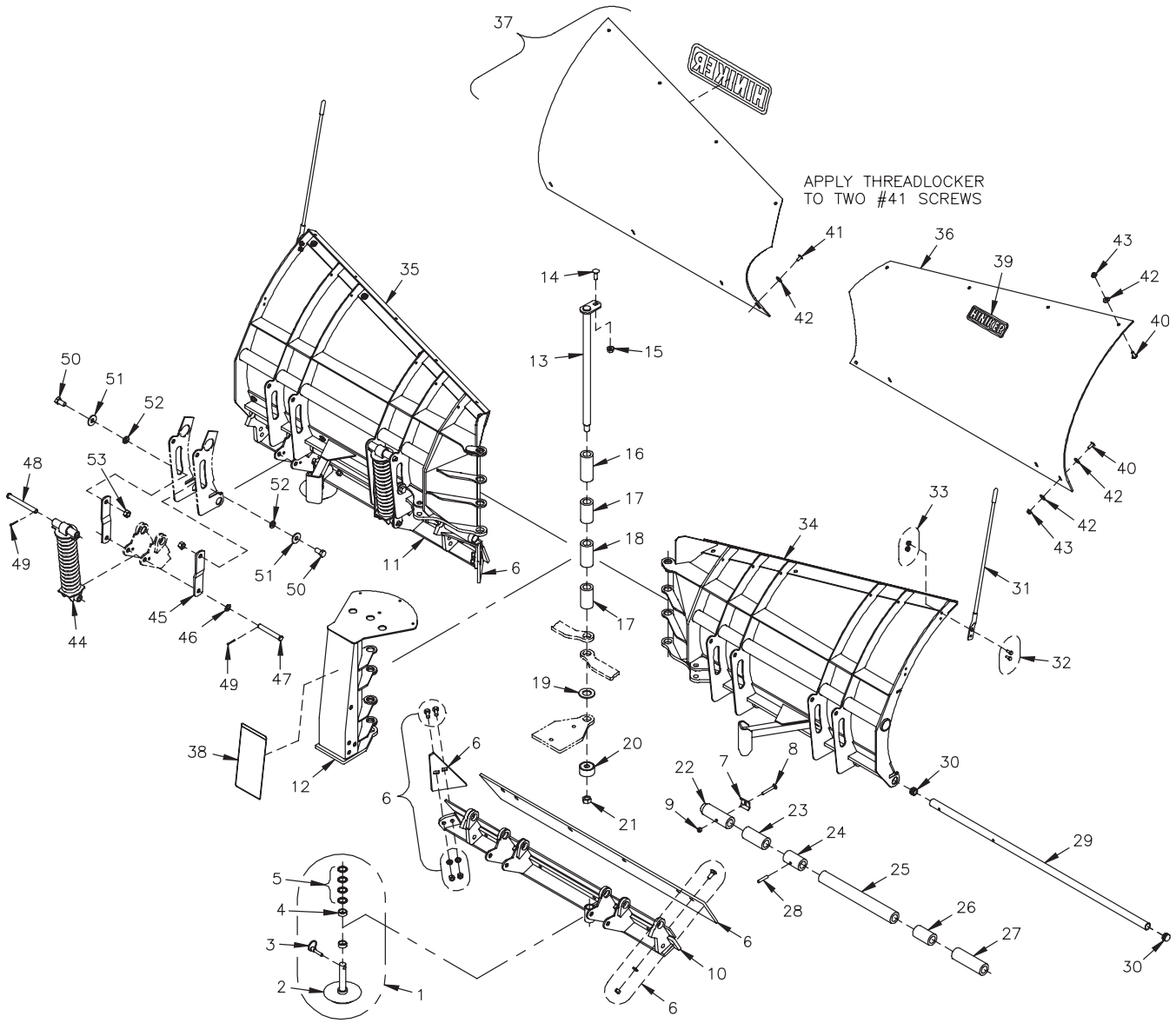

25013060 8 1/2' Moldboard Assembly
25013059 9 1/2' Moldboard Assembly

DWG. NO. 6740

SKID STEER V-PLOW SNOWPLOW

REF. NO.	PART NUMBER	DESCRIPTION	QTY.
1	25012297	Skid Assembly	2
2	25012316	Cast Skid Shoe	2
3	25010319	Lynch Pin	2
4	25010048	1/2” Spacer	4
5	952-004-071	Machinery Bushing	8
6	25013298	Cutting Edge Kit 8 1/2’ Plow 1/2” Thk (See Sec.3 P.11)	1
	25013299	Cutting Edge Kit 9 1/2’ Plow 1/2” Thk (See Sec.3 P.11)	1
7	25013240	Stop Plate	2
8	030-16075	Carriage Bolt 3/8-16 x 2 3/4 Gr. 5	2
9	951-003-002	Lock Nut 3/8-16 Nylon Insert	2
10	25013018	RH Trip Edge Weldment, 8 1/2’ Plow	1
	25013049	RH Trip Edge Weldment, 9 1/2’ Plow	1
11	25013019	LH Trip Edge Weldment, 8 1/2’ Plow	1
	25013050	LH Trip Edge Weldment, 9 1/2’ Plow	1
12	25012307	Center Mast Weldment	1
13	25012304	Hinge Pin Weldment	1
14	030-16130	Carriage Bolt 1/2-13 x 1 Gr. 5	1
15	951-005-055	Lock Nut 1/2-13 Mac Lock	1
16	25012301	Bushing, 4 11/16” Long	1
17	25011442	Bushing, 3 17/32” Long	2
18	25012302	Bushing 4” Long	1
19	033-11017	SAE Flat Washer, 1 1/4 Inch	1
20	25012303	Washer Weldment	1
21	951-005-037	Lock Nut 3/4-10, 2-Way	1
22	25013239	Bushing 5 7/8” Long	2
23	25013023	Bushing 4 3/8” Long	2
24	25011341	Bushing 3 3/8” Long, Steel	2
25	25013022	Bushing 15 15/16” Long, 8 1/2’ Plow	2
	25013042	Bushing 21 15/16” Long, 9 1/2’ Plow	2
26	25011338	Bushing 3 3/8” Long	2
27	25013021	Bushing 6 1/4” Long	2
28	30009024	Slotted Spring Pin 3/8 x 2	2
29	25013242	Trip Pin 8 1/2’ Plow	2
	25013241	Trip Pin 9 1/2’ Plow	2
30	25012375	End Cap	4
31	25010118	Blade Guide	2
32	950-001-110	Hex Head Cap Screw 5/16-18 x 1 Gr. 5	4
33	951-005-036	Lock Nut 5/16-18 Mac Lock	4
34	25013063	RH Wing Frame Weldment, 8 1/2’ Plow	1
	25013066	RH Wing Frame Weldment, 9 1/2’ Plow	1
35	25013064	LH Wing Frame Weldment, 8 1/2’ Plow	1
	25013067	LH Wing Frame Weldment, 9 1/2’ Plow	1
36	25013068	Poly Moldboard Blank 8 1/2’ Plow	1
	25013070	Poly Moldboard Blank 9 1/2’ Plow	1
37	25013069	Poly Blank/Logo Decal Assembly 8 1/2’ Plow	1
	25013071	Poly Blank/Logo Decal Assembly 9 1/2’ Plow	1
38	25013502	Decal - Removal	1
39	25011684	Decal - Hiniker	1
40	700-11704	Machine Screw 3/8-16 x 1 Slotted Truss Head	14
41	950-004-108	Machine Screw 3/8-16 x 3/4 Slotted Truss Head	2
42	952-002-013	Flat Washer 3/8 Inch, Stainless Steel	22
43	951-005-003	Lock Nut 3/8-16 Mac Lock	14
44	25011373	Spring Assembly	4
45	25012306	Strap	8
46	952-004-040	Machinery Bushing 21/32 x 1 1/8 x .048	4
47	953-002-049	Clevis Pin 5/8 x 4 3/4	4
48	953-002-045	Clevis Pin 5/8 x 6	4
49	035-42033	Cotter Pin 5/32 x 1 1/4	8
50	031-06302	Hex Head Cap Screw 5/8-11 x 1 1/4 Gr. 5	8
51	952-002-007	Flat Washer 5/8 Inch	8
52	25012305	Bushing	8
53	951-005-044	Lock Nut 5/8-11, 2-Way	8

FRAME ASSEMBLY

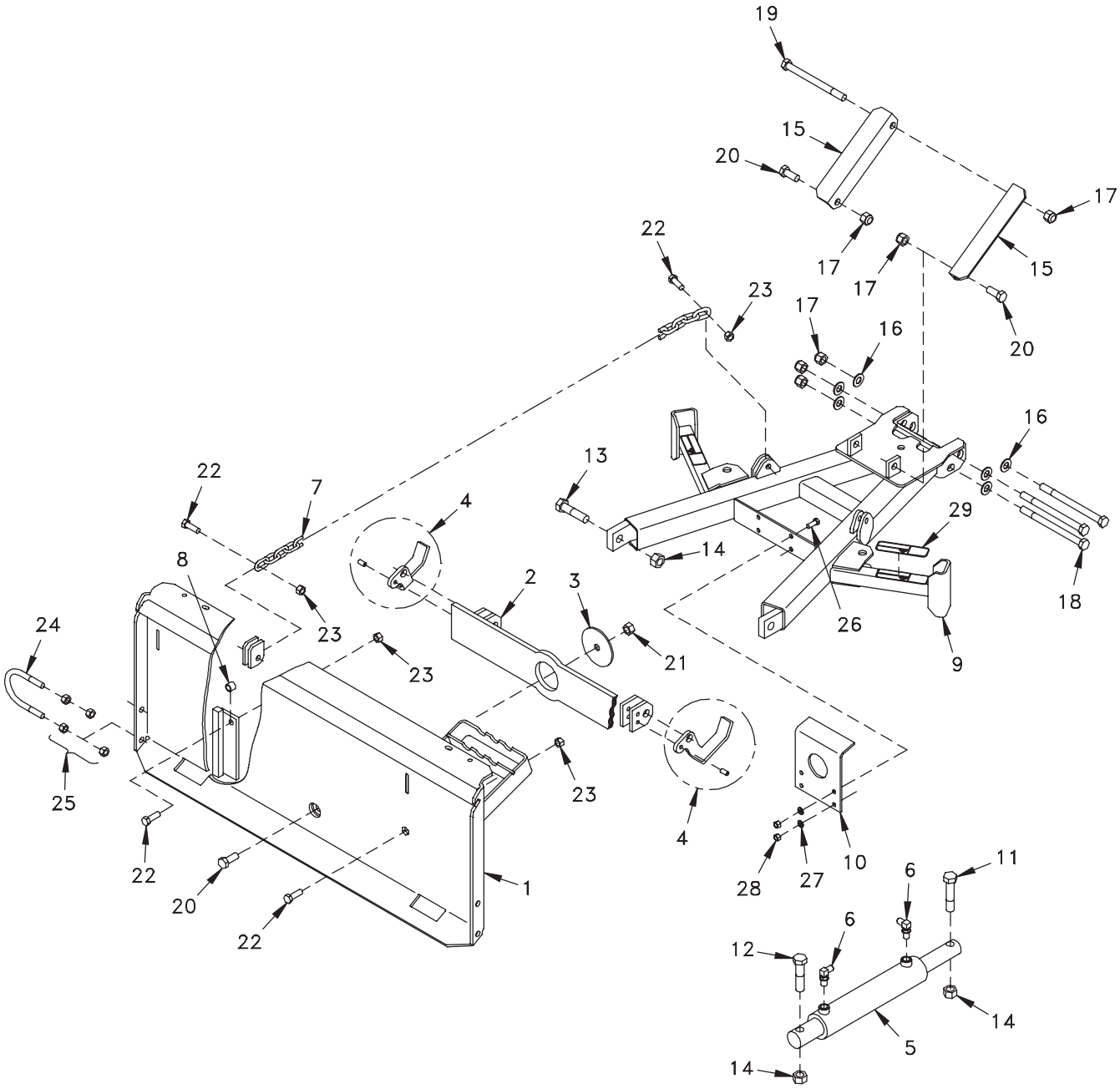

DWG. NO. 6119E

REF. NO.	PART NUMBER	DESCRIPTION	QTY.	REF. NO.	PART NUMBER	DESCRIPTION	QTY.
1	25012719	Mount Plate Weldment	1	16	952-004-070	SAE Flat Washer 5/8", Hardened	6
2	25011255	Bar Weldment	1	17	060756	Lock Nut 5/8-11 Nylon Insert	6
3	25011254	Washer	1	18	950-001-238	Hex Head Cap Screw 5/8-11 x 8 Gr. 5	3
4	25013590	Park Stand Feet Kit	1	19	950-001-165	Hex Head Cap Screw 5/8-11 x 7 1/2 Gr. 5	1
5	25011080	2 1/4 x 10 Hydraulic Cylinder (See Sec. 3 P. 7)	2	20	950-001-087	Hex Head Cap Screw 5/8-11 x 1 1/2 Gr. 5	3
6	956-005-022	90° Adapter 9/16 ORB x 9/16 JIC	4	21	951-005-044	Lock Nut 5/8-11 2-Way	1
7	25011251	Chain	2	22	950-001-125	Hex Head Cap Screw 1/2-13 x 1 1/2 Gr. 5	6
8	25011250	Spacer	2	23	10304	Lock Nut 1/2-13 2-Way	6
9	25012450	Push Frame/Decal Assembly	1	24	25013162	U-Bolt 1/2-13	1
10	25011269	Stop	1	25	951-001-007	Hex Nut 1/2-13	4
11	950-001-174	Hex Head Cap Screw 3/4-10 x 3 1/2 Gr. 5	2	26	950-001-105	Hex Head Cap Screw 3/8-16 x 1 Gr. 5	4
12	950-001-069	Hex Head Cap Screw 3/4-10 x 3 1/4 Gr. 5	2	27	952-001-007	Lock Washer 3/8 Inch	4
13	950-001-031	Hex Head Cap Screw 3/4-10 x 3 Gr. 5	2	28	951-001-005	Hex Nut 3/8-16	4
14	951-005-037	Lock Nut 3/4-10 2-Way	6	29	25012271	Warning Decal	2
15	25013360	Angle Brace	2				

HYDRAULIC OVERVIEW

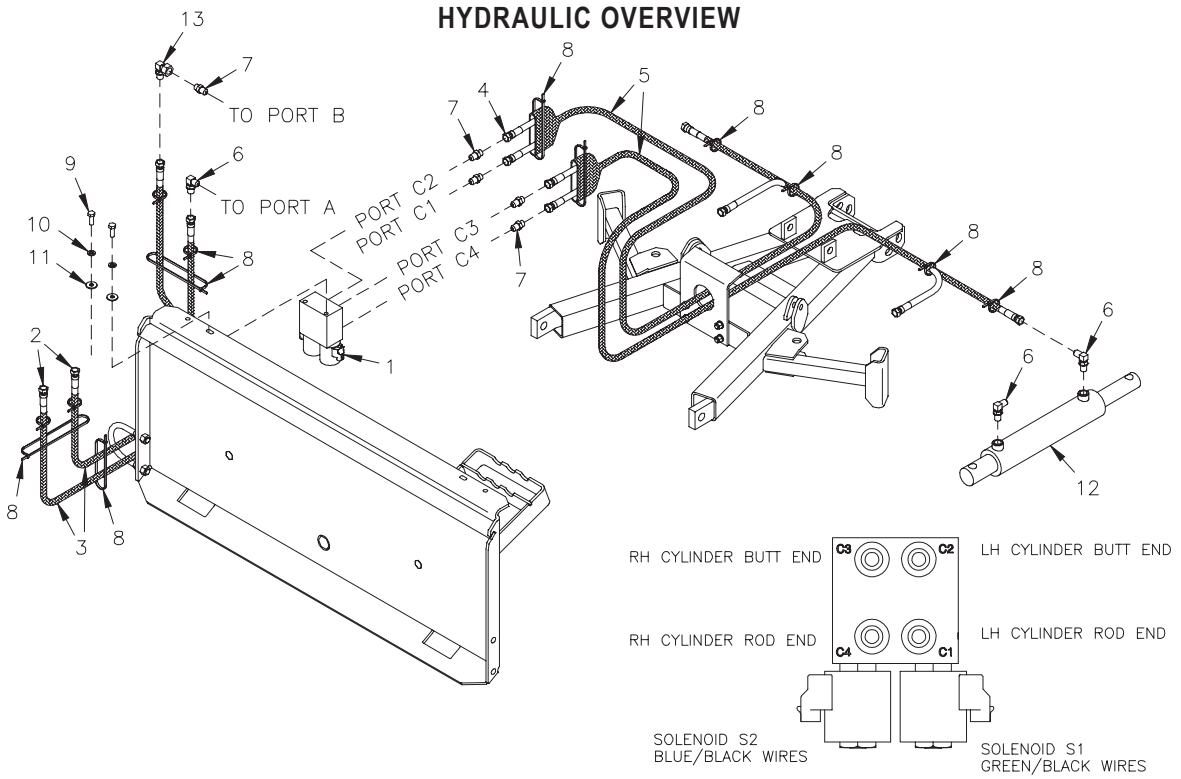

DWG. NO. 6120A

REF. NO.	PART NUMBER	DESCRIPTION	QTY.	REF. NO.	PART NUMBER	DESCRIPTION	QTY.
1	25011243	Valve Manifold Assembly (See Sec. 3, Page 8)	1	8	367-001-014	Plastic Cable Tie 8”	13
2	957-001-017	Hydraulic Hose Assembly 3/8 x 72”	2	9	950-001-105	Hex Head Cap Screw 3/8-16 x 1 Gr. 5	2
3	25011131	Nylon Sleeve 72” Long	2	10	952-001-007	Lock Washer 3/8 Inch	2
4	957-010-008	Hydraulic Hose Assembly 1/4 x 48”	4	11	952-002-003	Flat Washer 3/8 Inch	2
5	25012547	Nylon Sleeve 48” Long	2	12	25011080	2 1/4 x 10 Hydraulic Cylinder	2
6	956-005-022	90° Adapter 9/16 ORB x 9/16 JIC	5	13	956-005-002	90° Adapter 9/16 JIC	1
7	206-01024	Straight Adapter 9/16 ORB x 9/16 JIC	5				

2 1/4 X 10 HYDRAULIC CYLINDER

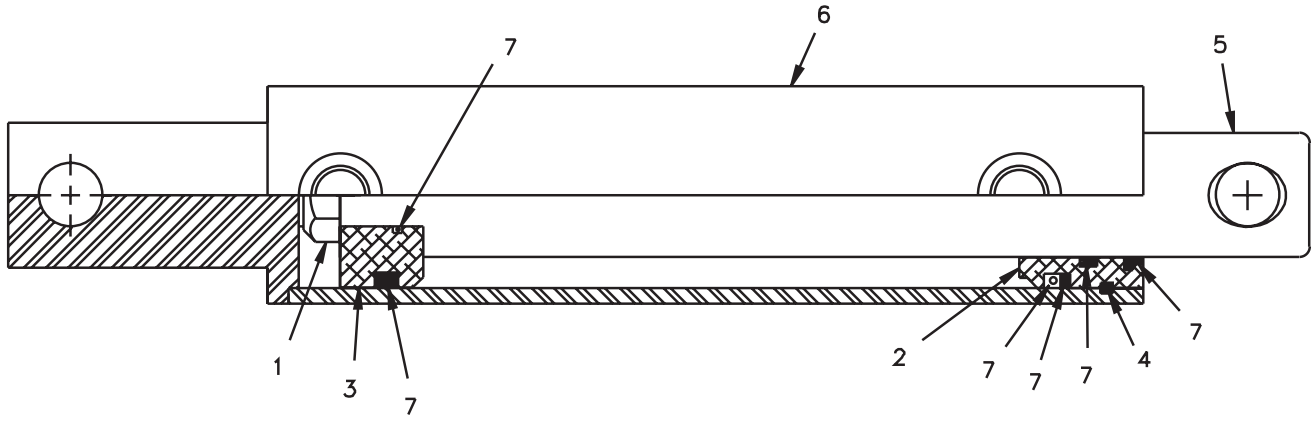

25011080 2 1/4 x 10 Cylinder

DWG. NO. 5189

REF. NO.	PART NUMBER	DESCRIPTION	QTY.	REF. NO.	PART NUMBER	DESCRIPTION	QTY.
1	25011119	Nut	1	5	25011123	Shaft	1
2	25011120	Head	1	6	25011124	Barrel	1
3	25011121	Piston	1	7	25011145	Repair Kit	1
4	25011122	Retaining Ring	1				

VALVE MANIFOLD

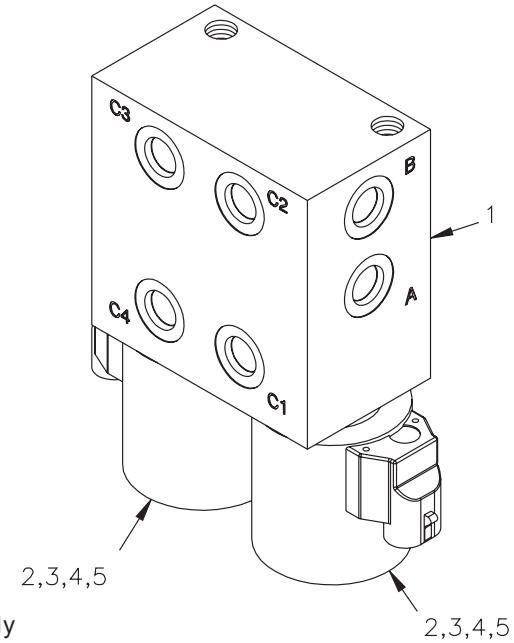

25011243 Valve Manifold Assembly

DWG. NO. 5190

REF. NO.	PART NUMBER	DESCRIPTION	QTY.	REF. NO.	PART NUMBER	DESCRIPTION	QTY.
1	25011241	Manifold Block	1	4	25011108	10 Size E-Coil	2
2	25011106	Orifice Disc	2	5	25011107	E-Coil Nut	2
3	25011240	Spool Valve	2	6	25011242	Seal Kit, Solenoid	2

ELECTRICAL WIRING

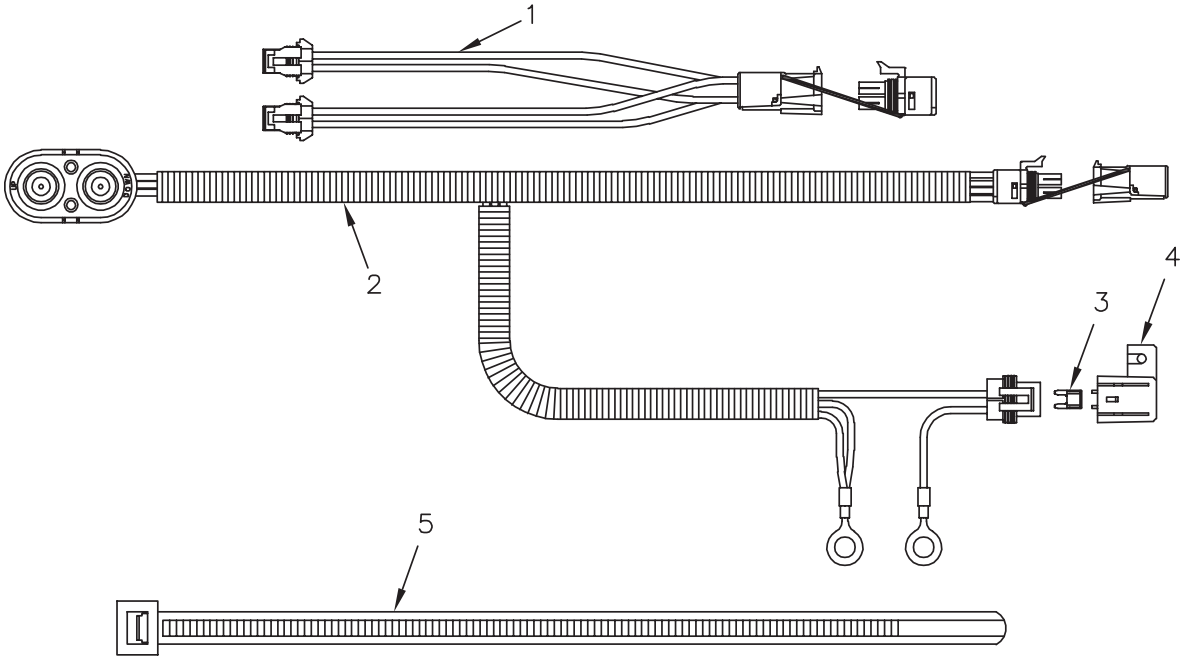

DWG. NO. 5227

REF. NO.	PART NUMBER	DESCRIPTION	QTY.	REF. NO.	PART NUMBER	DESCRIPTION	QTY.
1	38813064	Skid Steer Plow Harness	1	4	38400012	Cover, Fuse Holder	1
2	38813065	Skid Steer Harness V-Plow	1	5	921-001-108	Plastic Cable Tie 3/8 x 28 Inch	A/R
3	39207031	Fuse 10 AMP ATO/ATC	1				

POLY SNOW DEFLECTOR KIT

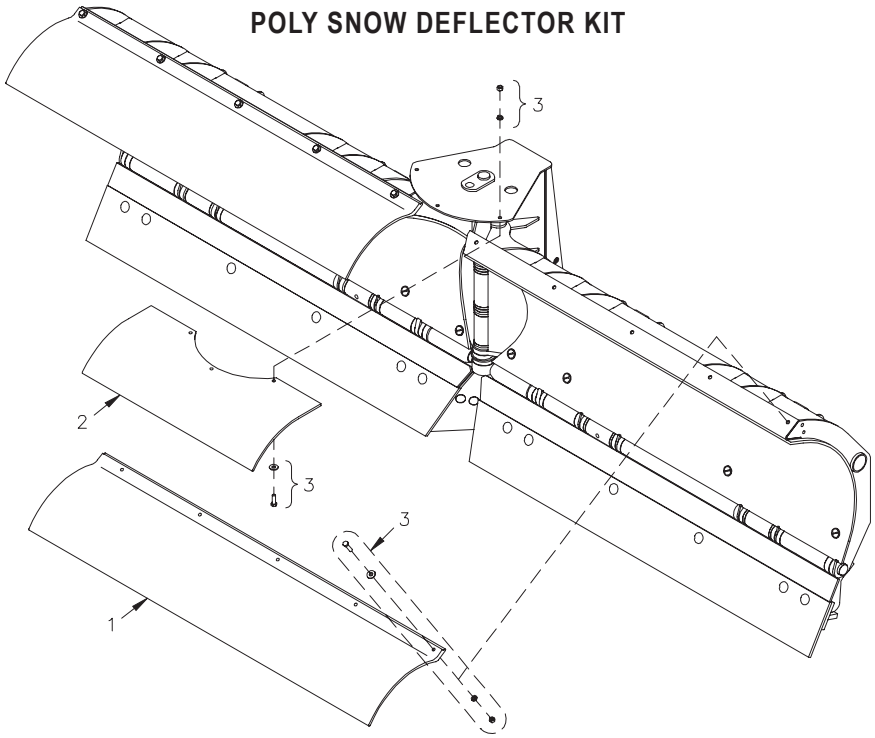

DWG. NO. 5679A

REF. NO.	PART NUMBER	DESCRIPTION	QTY.	REF. NO.	PART NUMBER	DESCRIPTION	QTY.
1	25011791	Poly Snow Deflector Kit 8 1/2' V-Plow	1	2	25011796	Center Deflector	1
	25011792	Poly Snow Deflector Kit 9 1/2' V-Plow	1	3	25011793	Bolt Box, Snow Deflector (Included With Kits)	1

RUBBER SNOW DEFLECTOR KIT

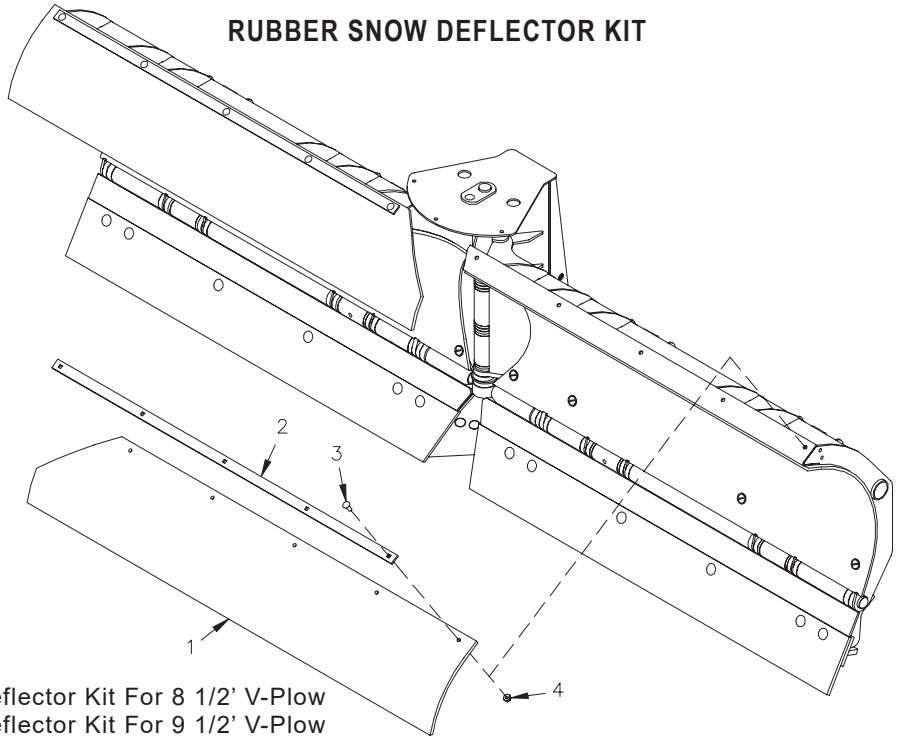

25010633 Snow Deflector Kit For 8 1/2' V-Plow
25010910 Snow Deflector Kit For 9 1/2' V-Plow

DWG. NO. 5191A

REF. NO.	PART NUMBER	DESCRIPTION	QTY.	REF. NO.	PART NUMBER	DESCRIPTION	QTY.
1	25010695	Snow Deflector, 8 1/2' V-Plow	2	3	030-16042	Carriage Bolt 5/16-18 x 1 Gr. 5, 8 1/2' V-Plow	10
	25010912	Snow Deflector, 9 1/2' V-Plow	2		030-16042	Carriage Bolt 5/16-18 x 1 Gr. 5, 9 1/2' V-Plow	12
2	25010690	Snow Deflector Strap, 8 1/2' V-Plow	2	4	951-005-036	Lock Nut 5/16-18 x 1 Mac Lock, 8 1/2' V-Plow	10
	25010911	Snow Deflector Strap, 9 1/2' V-Plow	2		951-005-036	Lock Nut 5/16-18 x 1 Mac Lock, 9 1/2' V-Plow	12

WEAR PLATE KIT

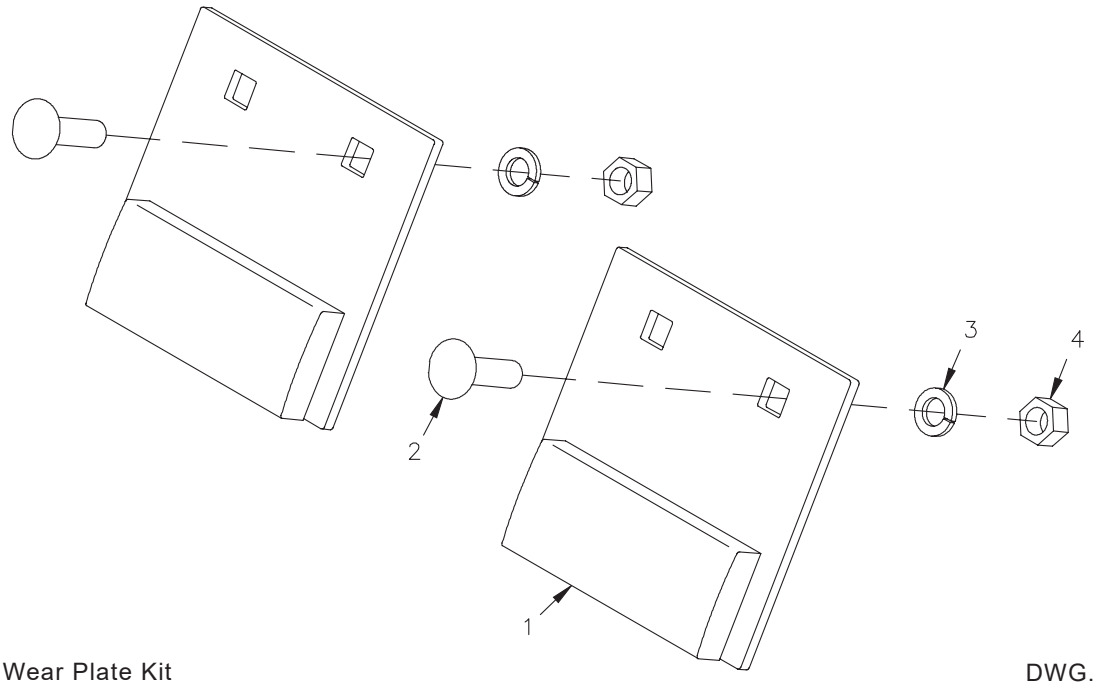

25012587 Wear Plate Kit

DWG. NO. 6331

REF. NO.	PART NUMBER	DESCRIPTION	QTY.	REF. NO.	PART NUMBER	DESCRIPTION	QTY.
1	25012588	Wear Plate Weldment	2	3	952-001-004	Lock Washer 1/2 Inch	4
2	950-003-058	Carriage Bolt 1/2-13 x 1 3/4 Gr. 5	4	4	951-001-007	Hex Nut 1/2-13	4

CURB GUARD KITS

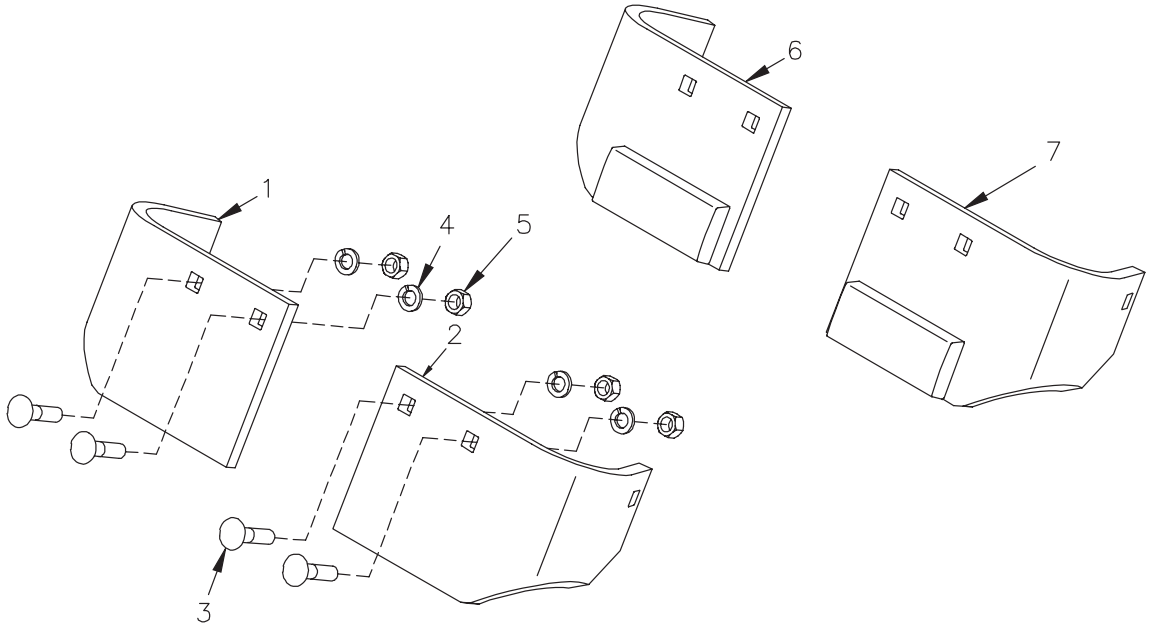

25011695 Curb Guard Kit - Standard
25012726 Curb Guard Kit With Wear Bars

DWG. NO. 5486

REF. NO.	PART NUMBER	DESCRIPTION	QTY.	REF. NO.	PART NUMBER	DESCRIPTION	QTY.
1	25011712	RH Curb Guard - Standard	1	5	951-001-007	Hex Nut 1/2-13	4
2	25011713	LH Curb Guard - Standard	1	6	25012722	RH Curb Guard With Wear Bar	1
3	950-003-051	Carriage Bolt 1/2-13 x 2 1/4 Gr. 5	4	7	25012723	LH Curb Guard With Wear Bar	1
4	952-001-004	Lock Washer 1/2 Inch	4				

CUTTING EDGE KITS

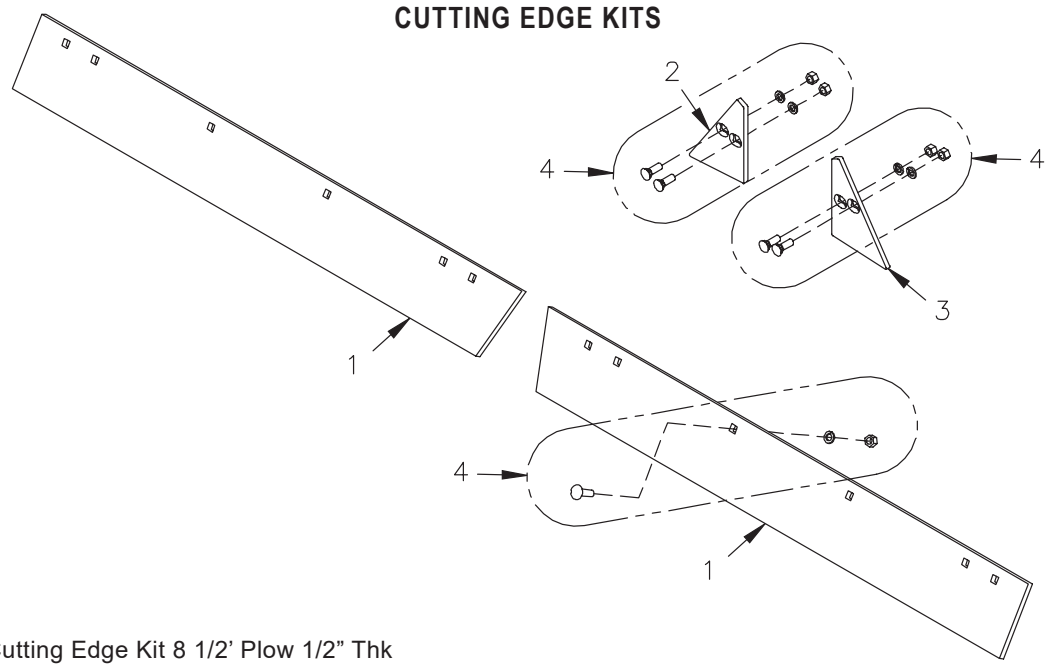

25013298 Cutting Edge Kit 8 1/2' Plow 1/2" Thk
25013299 Cutting Edge Kit 9 1/2' Plow 1/2" Thk

DWG. NO. 6122B

REF. NO.	PART NUMBER	DESCRIPTION	QTY.	REF. NO.	PART NUMBER	DESCRIPTION	QTY.
1	25012420	Cutting Edge 8 1/2' Plow 1/2" Thk	2	2	25013510	RH Center Cutting Edge Plate	1
	25012421	Cutting Edge 9 1/2' Plow 1/2" Thk	2	3	25013511	LH Center Cutting Edge Plate	1
				4	25012296	Cutting Edge Bolt Kit	1

BOX END WINGS

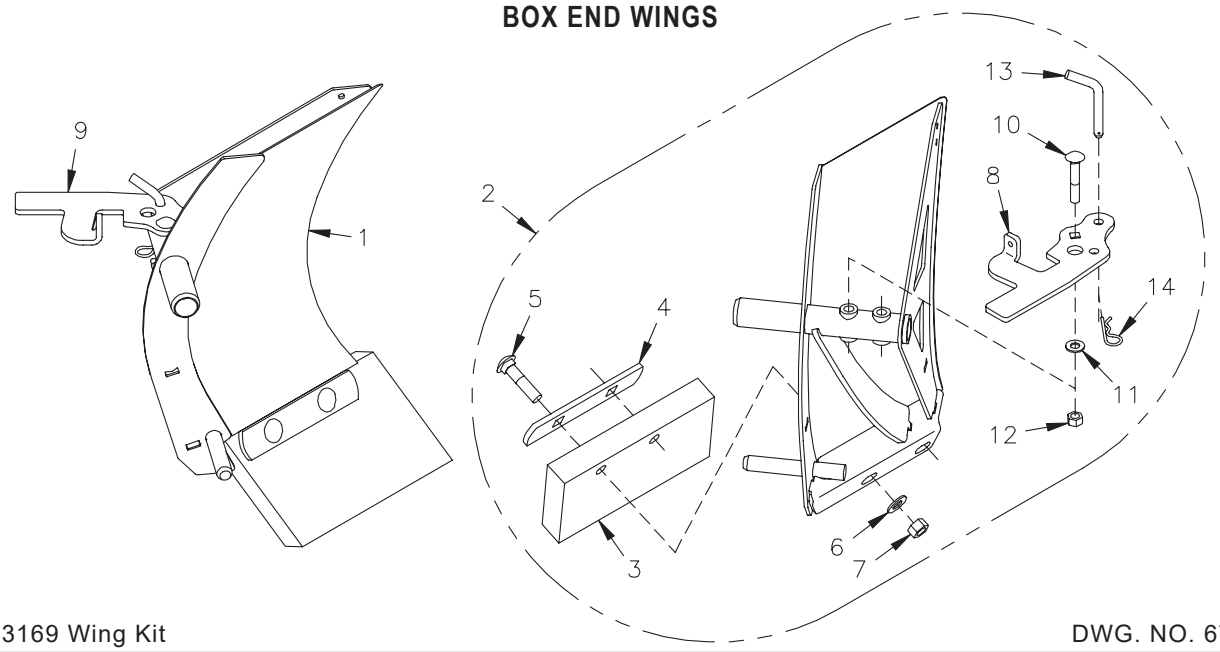

25013169 Wing Kit

DWG. NO. 6799A

REF. NO.	PART NUMBER	DESCRIPTION	QTY.	REF. NO.	PART NUMBER	DESCRIPTION	QTY.
1	25013214	Complete LH Wing Assembly	1	8	25013209	RH Locking Arm	1
2	25013215	Complete RH Wing Assembly	1	9	25013208	LH Locking Arm	1
3	25013205	Rubber Edge	1	10	030-16138	Carriage Bolt 1/2-13 x 3 Gr. 5	1
4	25013206	Strap	1	11	952-003-004	SAE Flat Washer, 1/2 Inch	1
5	030-12168	Carriage Bolt 5/8-11 X 2 3/4 Gr. 5	2	12	10304	Lock Nut 1/3-13 2-Way	1
6	952-003-003	SAE Flat Washer, 5/8 Inch	2	13	25013207	Bent Arm Pin 1/2 x 3	1
7	951-005-044	Lock Nut 5/8-11 2-Way	2	14	953-005-003	Hair Pin Cotter	1