HINIKER

PICKUP TRUCK SNOWPLOW
V-PLOW

Models 9285, 9295

OPERATOR'S MANUAL

DO NOT USE OR OPERATE THIS EQUIPMENT UNTIL THIS MANUAL
HAS BEEN READ AND THOROUGHLY UNDERSTOOD

PART NUMBER 25013472 Rev. C

TABLE OF CONTENTS

TO THE PURCHASER 2
SAFETY 3
OPERATING PROCEDURES 4
TROUBLE SHOOTING 9
MAINTENANCE 11
ASSEMBLY 13
SYSTEM CHECK-OUT AND JOYSTICK CONFIGURATION 24
HEADLAMP AIMING PROCEDURE 25
WIRING SCHEMATIC 26-27
POWER UNIT 28-29
SPECIFICATIONS 30
WARRANTY 31

TO THE PURCHASER

This product is designed and manufactured to give years of dependable service when properly maintained and used for the purpose for which it is intended. Never allow anyone to operate this equipment until they fully understand the complete contents of this manual. It is the responsibility of owners who do not operate this equipment to ensure the operator is properly instructed and understands the contents of this manual. It is also the owner's responsibility to ensure that anyone operating this equipment is mentally and physically capable of so doing.

Important information is contained in this manual to help ensure safe and efficient operation.

If you have any questions about this manual, or the equipment discussed herein, contact your Hiniker dealer.

TAKE NOTE! THIS SAFETY ALERT SYMBOL FOUND THROUGHOUT THIS MANUAL IS USED TO CALL YOUR ATTENTION TO INSTRUCTIONS INVOLVING YOUR PERSONAL SAFETY AND THE SAFETY OF OTHERS. FAILURE TO FOLLOW THESE INSTRUCTIONS CAN RESULT IN INJURY OR DEATH.

THIS SYMBOL MEANS:
- ATTENTION!
- BECOME ALERT!
- YOUR SAFETY IS INVOLVED!

SAFETY SIGNAL WORDS:

DANGER: Indicates an imminently hazardous situation that, if not avoided, will result in death or serious injury.

WARNING: Indicates a potentially hazardous situation that, if not avoided, could result in death or serious injury.

CAUTION: Indicates a potentially hazardous situation that, if not avoided, may result in minor or moderate injury, or damage to components.

NOTE: Addresses safety practices not related to personal safety.

All references to Left or Right are defined as viewing the plow from the cab of the truck.

Instructions for raising and lowering the plow refer to the joystick controller as received from the factory. The raise and lower functions may be reversed to suit the preference of the operator by following the instructions on page 24 for switching the controller joystick and face plate.

This Operator's manual is shipped with this equipment. Contact your Hiniker dealer for additional copies.

Always obtain original Hiniker service parts. Substitute parts could adversely affect equipment performance and warranty.

Check that your dealer has forwarded the Hiniker delivery report form along with the plow identification number because it helps maintain maximum service and warranty benefits. This does not put you on any mailing list, and information thereon is not available to others.

Your snowplow's identification number decal is at location (1) in the following illustration.

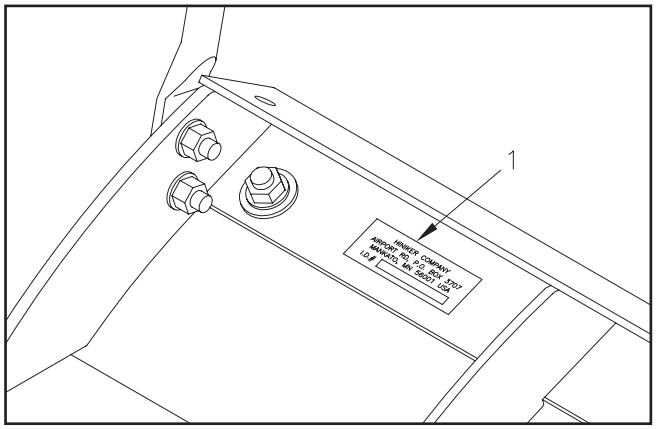

DWG. NO. 5993

Record the following information for later reference when obtaining service parts:

Purchase Date _____

Purchaser's Name _____

Dealer's Name _____

Machine I.D. No. _____

SAFETY

This is a safety alert symbol. It alerts an operator to information concerning personal safety. Always observe and heed these symbols and instructions, otherwise death or serious injury can result.

Operator safety is a principle concern in equipment design and distribution. However, many accidents occur because a few seconds of thought, and a more careful approach to handling, were ignored. Accidents can be avoided by knowing and following the precautions cited in this manual.

GENERAL SAFETY

1. Read this manual thoroughly. Make sure the operator understands it and knows how to operate this equipment safely. This equipment can kill or injure an untrained or careless operator and bystanders. If you sell this equipment, ensure the new owner acknowledges receipt of this manual.

2. This plow is intended for plowing snow only. Plowing gravel, rocks, etc., or using the plow for any purpose other than plowing snow could result in harm to the operator or bystanders or cause damage to the plow or vehicle, and will void the warranty.

3. Do not service or otherwise handle a plow in the raised position unless it is securely blocked against unexpected falling. Likewise, when servicing a plow with the wings extended, block wings to prevent unexpected wing movement due to accidental loss of hydraulic pressure or cylinder removal.

4. Do not attempt to handle or service this equipment, or direct others to do the same, unless you know how to do it safely and have the proper tools for the job.

5. Keep hands, feet, hair, and clothing away from moving parts.

6. Do not alter the equipment to the extent of compromising safety or performance.

BEFORE OPERATION

1. Discipline yourself to visually check for worn, damaged or cracked parts before starting use. Replace these with genuine Hiniker parts.

2. Escaping hydraulic oil under pressure can penetrate the skin, causing serious injury.

   Do not use your hand to check for leaks. Use a piece of paper or cardboard to find suspected leaks.

   Tighten all connections before pressurizing hydraulic lines.

   If fluid is injected into the skin, get medical attention immediately to prevent serious infection.

3. Check all controls and operating functions of the machine in a safe area before starting to work.

DURING OPERATION

1. Always wear seat belts when operating a motor vehicle.

2. Ensure everyone is clear of the machine, especially away from blind areas of the operator, before starting, actuating hydraulics or operating this equipment.

3. Do not plow snow at excessively high speeds.

4. Avoid hitting objects that will damage your plow or truck.

5. Set the brakes and stop the truck's engine before adjusting or servicing your plow.

AFTER OPERATION

1. Park the plow on a solid, level surface. Fully collapse the lift cylinder and use the stop plate, as described on page 7, before unhitching the plow to prevent the frame from falling forward.

OPERATING PROCEDURES

ATTACHING THE PLOW

Attachment prongs on the truck should be mounted such that the bottom edge of the prongs measure about 10 inches above the ground. Prong receivers on the plow frame should remain parallel to the ground and at the correct height by fully retracting the lift cylinder with the upper lift links and bracing the frame with the stop plate before removing the plow from the truck (see “Removing the Plow”). Ideally, the prongs on the truck should lift the plow frame slightly when driving into the plow for attachment.

Powdered graphite applied on the prongs will help the plow slide on and off more easily.

Check that prongs are in line with the receivers before slowly driving into the plow. Set the parking brake in the truck to prevent it from creeping back out from the receivers.

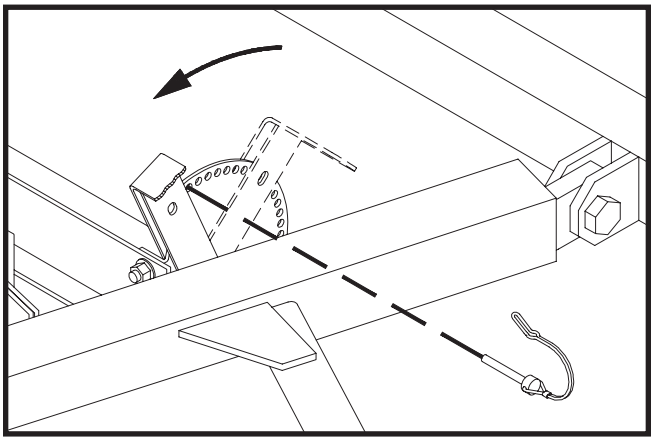

DWG. NO. 7196

Remove the tab lock pin from the parking stand index plate to raise the stand to its highest position. Reinstall the pin in the plate for transport.

Pull the latch handle into the clevis on the lift frame to force the sliders through the notches in the prongs and receivers. Check that both sliders are fully engaged. Pin the handle in the clevis with its klik pin. Failure to pin the handle in place may allow the plow to fall off the truck.

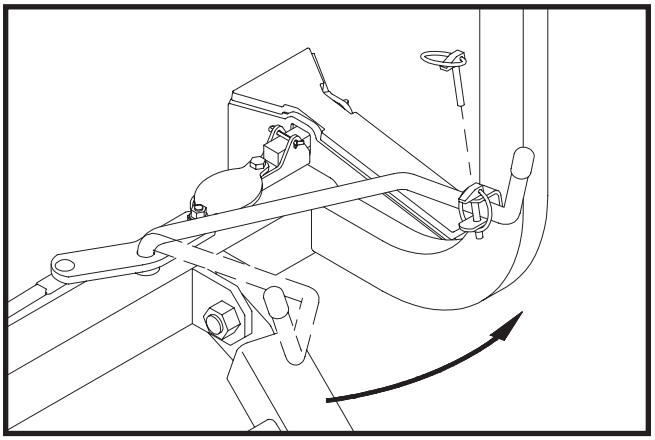

Handle Pinned With Plow On Truck DWG. NO. 6721A

Plug in the two electrical connectors between the plow and the truck after latching the plow. The alignment tab on the 16-pin plug will mate with the slot on the mating receptacle to ensure proper connection.

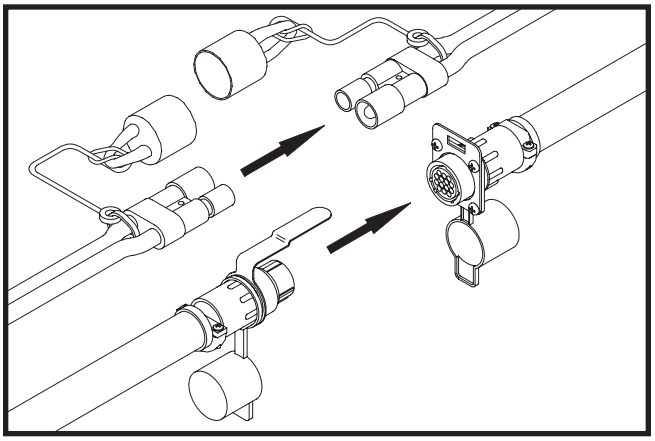

Alignment Tab and Slot DWG. NO. 6697

Check that the plow headlamps and turn signals are operational, and headlamps are aimed correctly. Test the lift and angling cylinders in a safe area before using the plow.

To make alignment of the plow easier in the future, mark a point on the back of the LH headlamp, a point on the hood near the front of the truck and a point on the windshield that are in line when you are seated behind the steering wheel. Line up these three points when driving into the plow.

THE JOYSTICK CONTROLLER

The joystick control box has slide switches for controlling power to the snowplow and for switching from the truck headlights to the headlights on the plow. The joystick controller raises and lowers the plow and angles the blade left or right. Two push buttons on the box are used to extend both wings to the scoop position or retract both wings to the V-position.

NOTE: Drawings 4181 and 4163 show the raise and lower functions of the joystick controller as received from the factory. Functions may be reversed to suit the preference of the operator by following the instructions on page 24 for switching the controller joystick and face plate.

The vehicle's electrical power must be turned on before the control box will function.

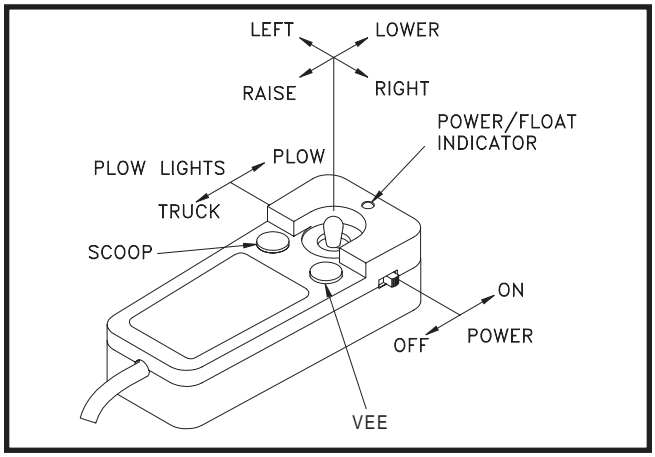

Joystick Control Box DWG. NO. 4181

Place the on/off switch on the joystick control box in the "On" position to supply power to the snowplow. A green light will indicate power is on.

Move the headlight slide switch on the control box to the "Plow" position to change from the truck lights to the snowplow lights. Activate high beam/low beam and turn signal/parking lamps from the truck as you normally would without the plow attached.

NOTE: When removing the plow, remember to place the headlight switch in the "Truck" position to return power to the truck's headlights.

Raise and lower the plow by moving the joystick forward and backward. Hold the plow at an intermediate height by releasing the joystick from the "Raise" position when the plow reaches the desired height. Moving the joystick to the "Lower" position will lower the blade to the ground and allow the plow to "Float" along the contour of the ground while plowing snow.

The green light on the control box will turn yellow to indicate the plow is in the float mode. Momentarily moving the joystick to the "Raise" position will remove the plow from the float mode and the yellow light will return to green.

Raise the blade before working the wing functions of the plow to avoid resistance from the ground. Move the joystick left or right to angle the blade to that side.

Push the left button on the control box to extend both wings into the scoop position. Push the right button to retract both wings into the V-position.

To hold the wings in position straight across the truck, start with the plow in the V-position, then push the left button on the control box to move both wings forward together and release the button when the wings are at the desired position.

TRANSPORTING THE PLOW

The extra weight of the snowplow on your truck will impair handling response and increase braking distance. The plow will also block some airflow to the vehicle's cooling system, possibly causing the vehicle to overheat. Therefore, it is important not to exceed speeds above 45 mph when the plow is attached. Remove the plow if you must drive your truck for long distances when the temperature is warm.

Raise the blade to a position where it will not interfere with the headlights before driving. Transport the plow with power to the joystick control box switched off to prevent accidental lowering of the plow. Never adjust the blade height or angle the wings while transporting the plow.

PLOWING SNOW

WARNING: Always wear a seat belt when plowing snow. Sudden contact with a hidden object can result in serious personal injury.

Inspect areas to be plowed before snowfall for potential hazards, and mark obstructions with stakes that will be seen when snow covers the ground. Identify any emergency equipment and utility outlets that may need to be cleared in the event of a storm. Prepare a plan beforehand for clearing snow from tight or enclosed areas and locate sites for stacking snow.

Level the plow blade to ensure best cleanup of snow and to obtain even wear of the cutting edges.

Swing both wings forward into the scoop position and lower the plow to the ground. Loosen the three bolts between the center mast and the front of the push frame, then turn the two sets of hex nuts on the upper channel of the adjustable brace to tilt the center mast forward or back until the cutting edges on the plow are in full contact with the ground.

– Loosen the top nuts and tighten the bottom to tilt the blade forward.

– Loosen the bottom nuts and tighten the top to tilt the blade rearward.

Fully tighten all hardware after the plow is leveled.

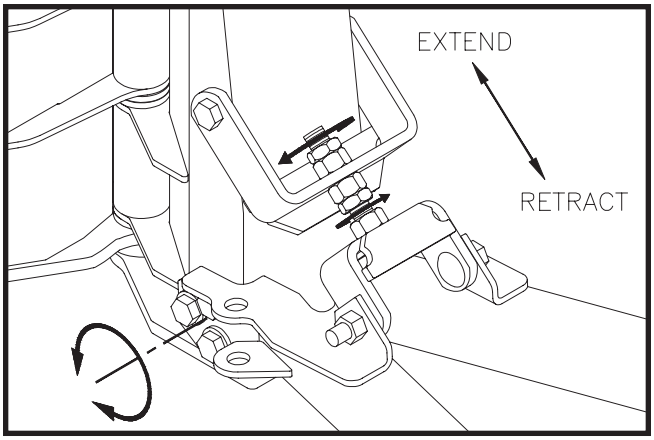

DWG. NO. 7197A

When using skid shoes on the back of the moldboard, adjust the skids according to the surface to be plowed. The bottom of the skids should be about 1/2” below the cutting edge when plowing gravel roads or lots. Skids should be even with the cutting edge on hard surfaces such as asphalt or concrete.

Always plow snow as it is accumulating. Wet snow may weigh about 12 pounds per cubic foot. The weight of snow being pushed by your plow may increase to several tons.

Allowing snow depth to grow to unmanageable levels can cause difficult removal problems and can be costly in terms of wear on equipment.

WARNING: Serious personal injury can result from plowing at excessive speeds, as well as costly damage to equipment and property, if an obstruction is encountered while plowing. Do not exceed 10 mph while plowing.

Plow snow in the lowest truck gear to transfer maximum power to the cutting edge. Clear areas in front of buildings first. Backdrag snow away from buildings by driving to the building with the plow raised, then dropping the blade to pull snow away. Push snow to outer edges of the lot after snow is away from buildings.

Begin clearing large lots by putting the plow in the V-position and creating a single path. Roll snow to the outer edges of the lot by taking successive passes with the blade angled, or put the plow in the scoop position and push snow to the end of the lot. Break up hard snowbanks with the plow in the V-position.

When plowing very deep snow, it may be necessary to raise the blade and shear off layers of snow until a working area is cleared. Work small areas in multiple passes to push snow to outer edges. Generally, 6 inch snow can be plowed with the entire blade width; 9 inch snow with 3/4 of the blade width; 12 inch snow with 1/2 of the blade width. Local conditions will determine how much work can be done before stalling or getting stuck.

PARKING

Lower the plow to the ground when parking your truck for a long period of time with the plow attached. Place the on/off switch in the “off’ position to prevent the plow from drawing power from the truck battery. The plow’s power unit may continue to draw electrical current from the truck battery if the control switch is left on; possibly resulting in insufficient charge to start the truck.

REMOVING THE PLOW

To remove the snowplow from your truck, park on a solid level surface with the blade straight across the truck. Lower the plow to the ground and leave the controller in the “float’ mode.

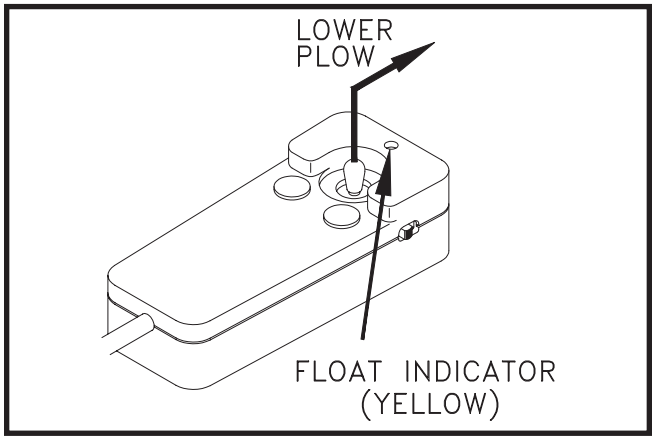

Lower Plow, Leave Controller In “Float” DWG. NO. 4163

NOTE: The plow control box must be in the “float” mode to manually retract the lift cylinder rod. If the cylinder rod cannot be retracted with power on and the controller in float, loosen the packing nut on the lift cylinder up to 1 1/2 turns to reduce friction.

Retracting the lift cylinder before removing the plow from the truck will orient the prong receivers correctly for reattaching the plow later. Failure to retract the lift cylinder rod will allow the lift frame to fall forward, possibly causing personal injury or damage to plow components.

With the plow lowered to the ground and the controller in the “float” mode, push down on the upper lift links to full retract the lift cylinder rod.

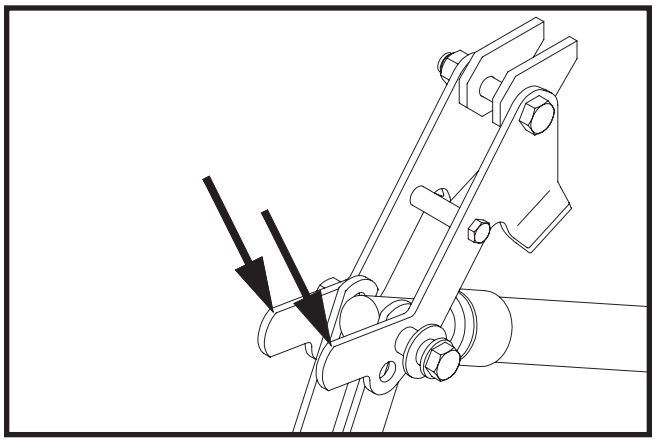

Retract Cylinder With Upper Lift Links DWG. NO. 6000A

Rotate the stop plate up to contact the spacer bushing on the lift cylinder bolt.

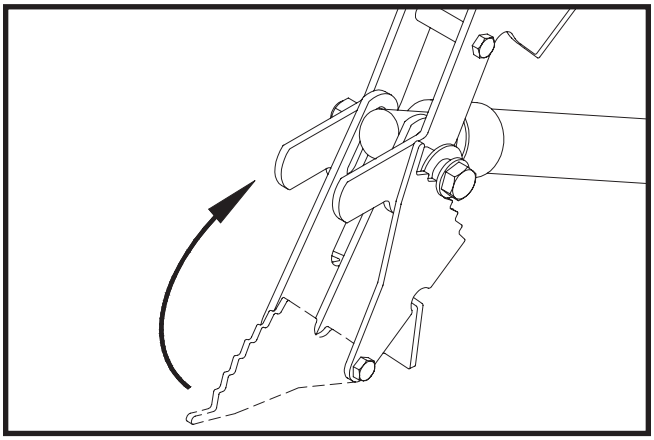

Rotate Stop Plate DWG. NO. 6004A

Gently push back on the headlight bracket to tilt the frame back as far as possible, then release the bracket to allow the weight of the lift frame to lock the stop plate in place.

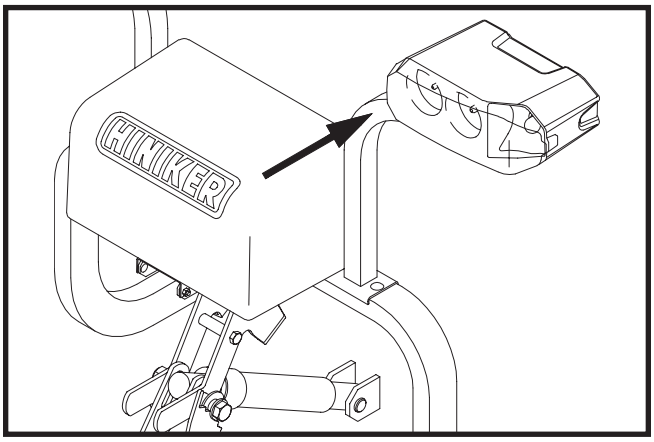

Push Lift Frame Back DWG. NO. 6005B

Swing the latch handle open until the sliders are fully removed from the attachment prongs.

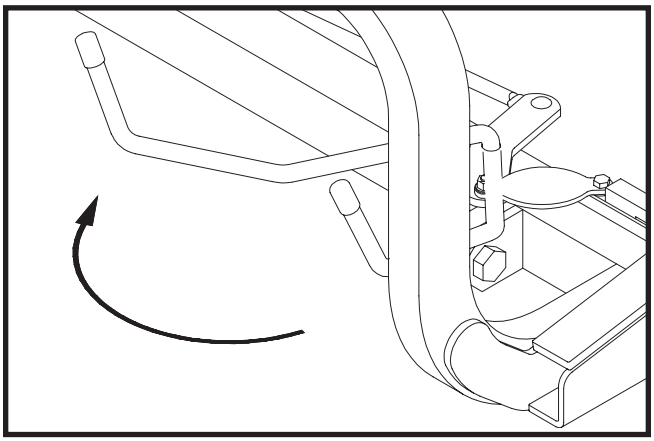

Swing Handle To Remove Sliders DWG. NO. 6722A

Lower the parking stand to the ground by removing the tab lock pin from the stand index plate, then swing the stand to the ground with the lever.

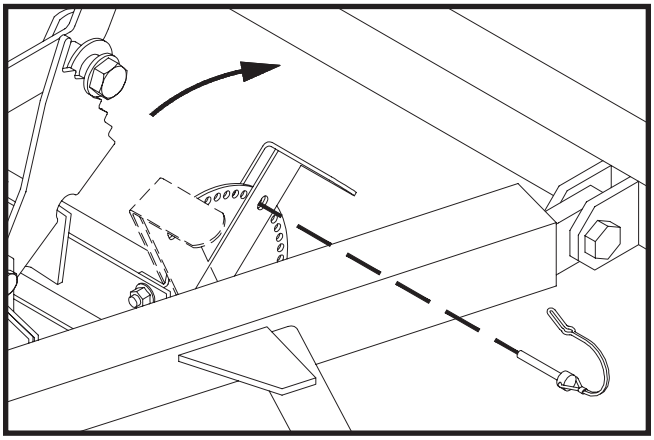

Lower And Pin Parking Stand DWG. NO. 7198

Reinstall the pin in the index plate through the hole in the lever to hold the stand in place.

Disconnect the electrical connectors by pulling them straight out from the receptacles. Do not twist the connectors. Twisting will damage the connector pins or the wiring harness.

Place dust caps on connectors to prevent contamination.

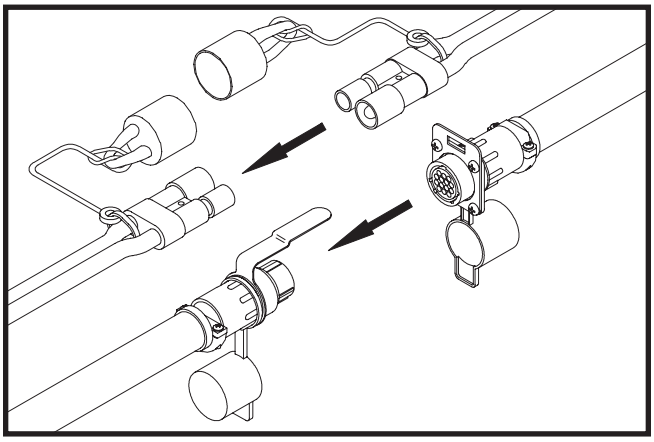

Disconnect Plugs DWG. NO. 6698

Back inside the truck, return control of the headlights to the truck and switch power off on the snowplow control box, then slowly back the truck out from the plow.

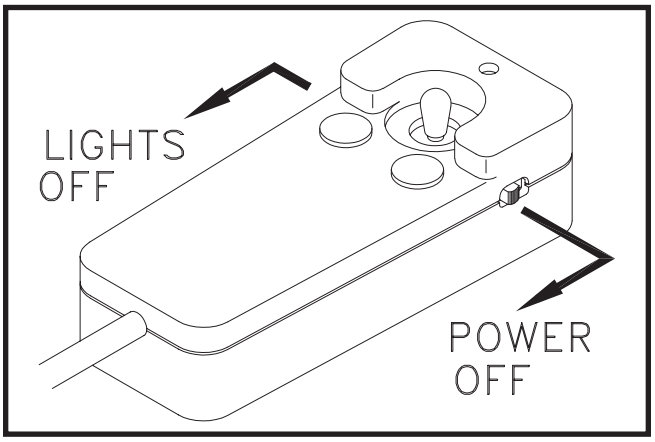

Turn Off Lights And Power DWG. NO. 4164

NOTE: The stop plate will automatically fall forward as soon as the lift cylinder is fully extended for raising the blade prior to transporting the plow.

If the snowplow won't be used for an extended period of time, the prong weldment can be removed from the truck by removing the hex bolts that fasten it to the truck mount frame.

TROUBLE SHOOTING

GENERAL

1. Check to see that the motor is wired correctly with tight connections, for the proper voltage.
2. Check reservoir oil level.
3. Check that wiring harness relay connections are wired correctly
4. Check for external leakage at cylinders, hoses and power unit.

PROBLEM	POSSIBLE CAUSE	REMEDY
1. Plow does not attach to vehicle	A. Receivers are tipped forward	A. Fully collapse lift cylinder and rotate stop plate up to brace the lift frame before removing plow from truck
	B. Prongs recoil out of receivers when attaching	B. Slowly drive into receivers and set parking brake
	C. Park stand pinned too low	C. Lower receivers by adjusting park stand.
2. Pump motor does not run	A. Defective solenoid	A. Replace solenoid
	B. Defective pump motor	B. Replace brushes or motor
	C. Weak or defective battery	C. Charge or replace battery
	D. Bad electrical connections	D. Clean and tighten connections
	E. Defective joystick control box	E. Replace control box
	F. Blown 10A fuse supplying power to control box	F. Replace fuse
3. Pump runs with joystick in neutral position	A. Defective solenoid	A. Replace solenoid
	B. Defective joystick control box	B. Replace control box
	C. Wiring short	C. Locate and repair
4. Plow will not lower	A. Reversed wiring on valve block	A. Correct wiring
	B. Defective joystick control box	B. Replace control box
	C. Defective lift return valve or coil	C. Replace valve or coil
5. Plow will not raise or raises slowly, motor runs	A. Weak or defective truck battery	A. Charge or replace battery
	B. Oil level low	B. Add oil (do not overfill)
	C. Hydraulic connection leak	C. Tighten or redo connection
	D. Lift valve not opening properly	D. Replace valve
6. Plow does not remain raised with joystick in “neutral” position	A. Leakage through pump check valve	A. Clean valve, or replace
	B. Leakage through solenoid lowering valve	B. Clean valve, or replace
	C. Internal leakage in cylinder	C. Repack or replace cylinder
	D. Defective joystick control box.	D. Replace control box

PROBLEM	POSSIBLE CAUSE	REMEDY
7. Angling cylinders relieve too easily or too difficultly while plowing	A. Relief pressure set too low or too high	A. Have relief pressure adjusted by Hiniker snowplow dealer
8. Oil leaks from lift cylinder.	A. Loose packing B. Defective cylinder	A. Tighten packing 1/8 turn B. Repack or replace cylinder
9. Battery goes dead with power to the control box on and joystick in neutral position.	A. Short in wiring B. Short in valve coil(s) C. Defective joystick control box	A. Locate and repair B. Replace coil(s) C. Replace control box
10. Battery goes dead with power to the control box off.	A. Short in wiring	A. Locate and repair
11. Plow lights are dim	A. Bad connection(s) B. Lights not properly grounded	A. Repair connection B. Properly ground
12. Plow does not clean-up snow from low areas	A. Joystick controller in neutral	A. Controller should be in the down position (float)
13. In extremely cold temperatures, the oil in the hydraulic system is thickened, causing slow functioning of the plow	A. Cold temperatures	A. As the system warms, the oil will thin out and function normally. B. Select Hiniker Cold Flow Hydraulic Oil for plowing in extremely cold temperatures.
14. Pump chatters when raising plow	A. Hydraulic oil low	A. Add hydraulic oil until chattering stops. Do not overfill.
15. Oil running out of cap on hydraulic reservoir	A. Plowing on steeply inclined terrain B. Too much oil	A. Avoid excessive inclines or change direction of plowing B. Remove excess oil
16. Vehicle overheats with the plow on	A. Vehicle coolant level low B. Ice and snow buildup in grill C. Insufficient airflow to engine compartment	A. Add coolant B. Remove ice and snow C. Transport plow at lower speeds
17. Plow lights do not operate with plow attached	A. Light switch on joystick control box in “truck” position B. Defective relay C. Faulty light switch on joystick control box D. Blown 10A fuse on vehicle accessory feed	A. Move switch to “plow” position B. Replace relay C. Replace joystick control box D. Replace 10A fuse
18. Truck headlights do not operate properly with plow removed	A. Light switch on joystick control box in “plow” position B. Defective relay	A. Move switch to “truck” position B. Replace relay

MAINTENANCE

WARNING: Do not service or otherwise handle a plow in the raised position unless it is securely blocked against unexpected falling. Likewise, when servicing the plow with the wings extended, block wings to prevent unexpected wing movement due to accidental loss of hydraulic pressure or cylinder removal.

Dependable snowplow operation is the result of following good maintenance procedures. Inspect your plow frequently to ensure that all parts are working smoothly, and develop a schedule for maintenance at required intervals.

GENERAL

Wash salt and dirt off the plow before storage. **Do not power wash hydraulic cylinders, as high pressure can damage seals and cause cylinder failure.** Touch-up any chips or scratches in the paint and apply a light coating of grease to extended cylinder rods to prevent corrosion.

HYDRAULIC SYSTEM

The majority of snowplow operational problems are caused by bad oil in the hydraulic system. Hydraulic oil should be changed every year for best performance. Select Hiniker Cold Flow Hydraulic Oil or an equivalent oil that meets military specification 5606, for plowing in extremely cold temperatures.

Change hydraulic oil with the wings in the V-position and the plow on the ground. Disconnect three electrical wiring harnesses from the power unit and uncouple five hydraulic lines. Unbolt the power unit from the plow, and remove it to a clean working area that can capture any spilled oil.

Carefully unbolt the oil reservoir from the power unit and discard old oil.

Clean the suction filter at the pump inlet and wipe any metal shavings off the magnet on the pump.

Re-attach the reservoir onto the power unit and re-connect the power unit on the snowplow before adding new hydraulic oil.

Pour hydraulic oil into the power unit reservoir until the oil level reaches the fill level.

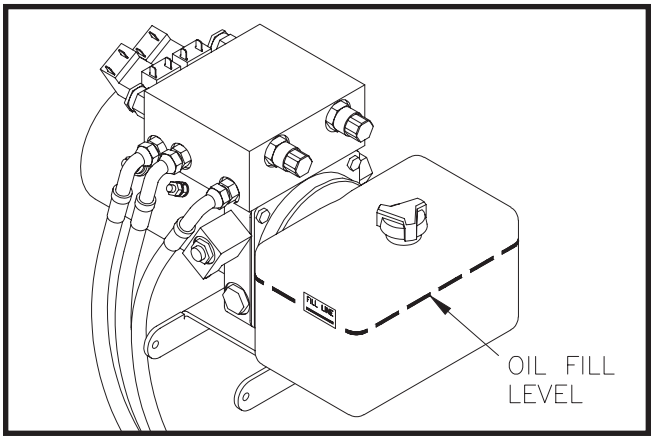

DWG. NO. 6453A

Raise and lower the plow, and cycle the wings to purge any air trapped in the system. Check the oil level with the plow on the ground and the wings retracted. Add oil to the fill level, if necessary, but do not overfill the reservoir.

MECHANICAL COMPONENTS

Prior to the operation of a new snowplow, or one which has been stored, inspect all hardware and verify proper torque on all bolts and nuts in accordance with the recommended torque specifications.

GRADE 5 TYPE B & F LOCK NUT TORQUE VALUES

Size	Ft-lbs.	N-m
5/16”	13-18	17-25
3/8”	23-33	31-44
1/2”	58-82	79-112
5/8”	117-165	158-223

GRADE 5 BOLT TORQUE VALUES*

Size	Ft-lbs.	N-m
1/4”	8-12	11-16
3/8”	29-41	39-56
1/2”	73-103	99-140
5/8”	146-206	198-279

*Applications without lock nuts.

Loose bolts can cause hole elongation and part failure resulting in dangerous operating conditions and equipment breakdown.

Check all hardware periodically during the plowing season and keep tightened to specified torques. Replace worn bolts and lock nuts with grade 5 bolts and equivalent type B or type F lock nuts. Type B lock nuts are plain hex; type F lock nuts are flanged hex.

Inspect wear of the cutting edges before every plowing season and frequently throughout the season. Replace cutting edges before wear is into wing or mast sections to avoid damage to these components.

The 5/16” hex bolts in the latch sliders are factory retained with anaerobic threadlock. If removal or replacement of these bolts is necessary, purchase new bolts with threadlocker from your Hiniker dealer, or apply a commercially available threadlock, i.e., Loctite 242 (blue) to standard 5/16-18 x 3/4” grade 5 hex bolts before reassembly.

ELECTRICAL MAINTENANCE

Periodically check all electrical connections for proper fit and remove any contamination that may be present.

To prevent contamination always place dust caps on connectors when not in use. This is particularly important when the plow is being stored. A light coat of dielectric grease is recommended to reduce corrosion of the contacts and to make connecting and disconnecting easier.

Before each season check the vehicle battery and electrical system for proper operation. A weak battery, dirty terminals, or faulty charging system may cause improper operation and possible failure of the joystick controller.

Before every plowing season, and throughout the season, check the snowplow headlamps for proper function and aim. Refer to sections titled “System Check-Out” and “Headlamp Aiming Procedure” in this manual for instructions.

PLOW ASSEMBLY

GENERAL INFORMATION

WARNING: To prevent personal injury or death, be certain to keep clear of any parts that may drop when removing bundling straps, wires or brackets. Support heavy sections with hoist or blocks before removing wires or straps.

In the following instructions, left and right machine references are defined as being viewed from the cab of the truck.

Be certain that hydraulic hoses and electrical wires are safely routed and allow full motion of moving parts. Secure loose wires with plastic tie straps.

Some components are fastened at incorrect locations for shipping purposes.

All hardware should be tightened only enough to ensure safety during assembly. Torque hardware to specified values, as shown in the following chart, only after assembly has been completed.

GRADE 5 TYPE B & F LOCK NUT TORQUE VALUES

Size	Ft-lbs.	N-m
5/16”	13-18	17-25
3/8”	23-33	31-44
1/2”	58-82	79-112
5/8”	117-165	158-223

GRADE 5 BOLT TORQUE VALUES*

Size	Ft-lbs.	N-m
1/4”	8-12	11-16
3/8”	29-41	39-56
1/2”	73-103	99-140
5/8”	146-206	198-279

* applications without lock nuts

Replace worn bolts and lock nuts with grade 5 bolts and equivalent type B and type F lock nuts. Type B lock nuts are plain hex; type F lock nuts are flanged hex.

PLOW ASSEMBLY

1. Lift the snowplow moldboard assembly to a clear level working area by hooking hoist chains through the two holes in the top plate of the center mast. The hoist should be capable of lifting at least 1,000 lb. loads.

   Remove two side markers and 5/16 inch hardware from the top of the moldboard, and set aside for assembly later. Save two sets of 5/16 inch hex bolts, flat washers and lock nuts from the shipping brackets for assembling the side markers.

2. Open the frame crate and set aside the power unit box, headlamp boxes and parts boxes for later assembly. Remove the frame assembly from the shipping crate to a piece of cardboard or other padding that will prevent scratches in the paint.

   Locate the 3/4 inch x 4-1/4 inch hex bolt, 3/4 inch nylon insert lock nut and one 90° O-ring/flare hydraulic fitting in the hardware bag in the parts box.

   Install the O-ring end of the 90° fitting into the lift cylinder port so that the flared end points toward the rod end and is directed up about 20° from the cylinder centerline to provide clearance for installing the hose later.

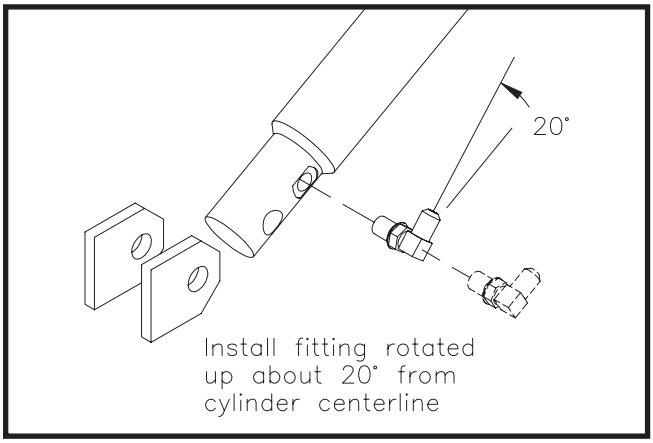

DWG. NO. 7147

Swing the lift frame up to its working position and hold with a hoist or forklift. Bolt the upper lift

links to the outside of the two lugs on the lift frame, then pin the lift cylinder between the two lugs on the frame assembly with the hardware provided.

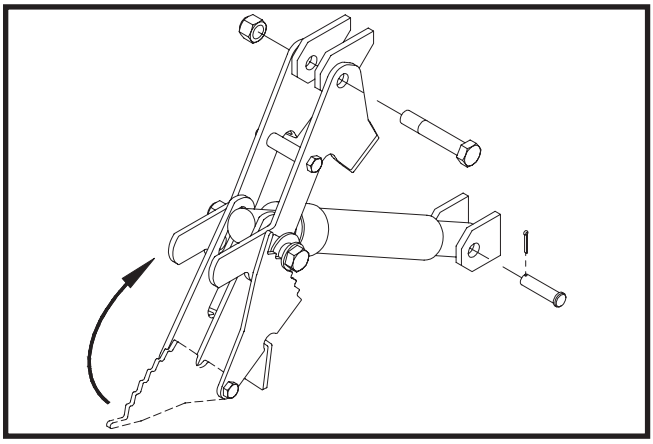

DWG. NO. 6007A

Rotate the stop plate assembled to the push frame up to contact the spacer bushing on the lift cylinder bolt. Gently push back on the upper lift frame tube, then release to allow the weight of the frame to lock the stop plate in place.

3. Remove two 5/8 inch x 8 inch hex bolts from the front of the pushframe and also remove the 5/8 inch x 7 1/2 inch hex bolt from the adjustable brace. Save the hardware for reinstallation.

   Remove shipping straps from between the center mast and lugs on the back of the moldboard assembly. Discard the straps and save the hardware for reinstallation.

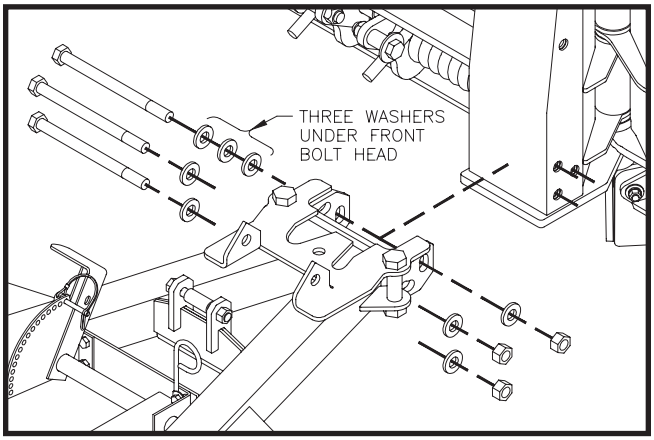

DWG. NO. 7199A

Move the frame assembly to the back of the moldboard assembly and align three sets of holes at the front of the frame assembly with holes through the moldboard center mast. Fasten the frame to the moldboard with three 8 inch long hex bolts with flat washers under the head. Use three washers under the head of the front bolt. Secure the assembly with flat washers and lock nuts.

Pin the parking stand to hold the square tubes of the pushframe parallel to the ground.

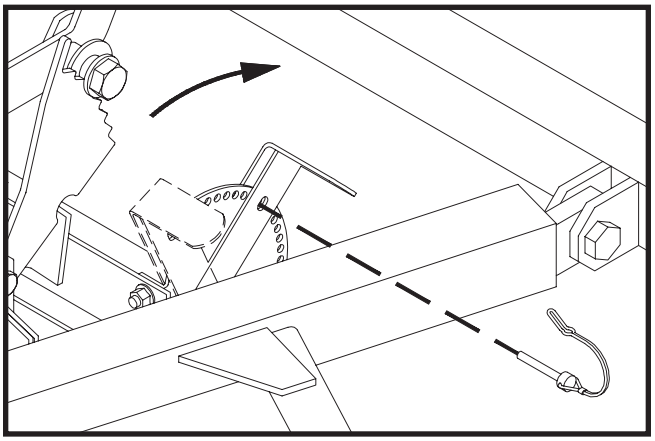

DWG. NO. 7198

The bottom surface inside the two prong receiver channels should measure about 10 inches above the ground in the working position.

Fasten the adjustable brace to the center mast with the 7 1/2 inch long hex bolt and lock nut removed earlier.

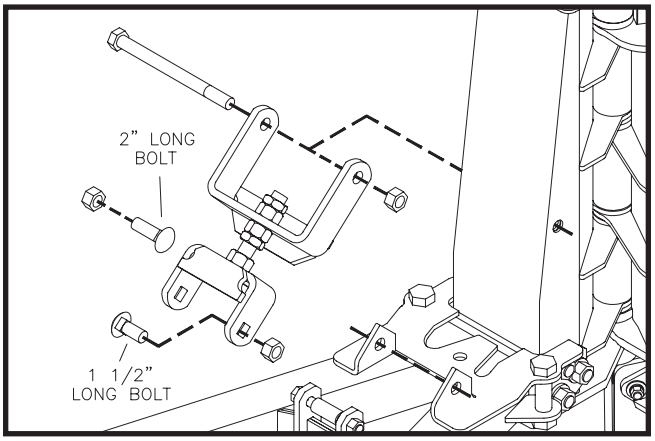

DWG. NO. 7200A

Fully tighten all hardware between the center mast and pushframe.

Use the adjustable brace to level the cutting edges to the ground after the plow is attached to the truck. Refer to page 22 for details.

4. Remove two hydraulic cylinders from the parts box. From the hardware bag, remove three 90° O-ring/flare hydraulic adapters and one 45° O-ring/flare adapter.

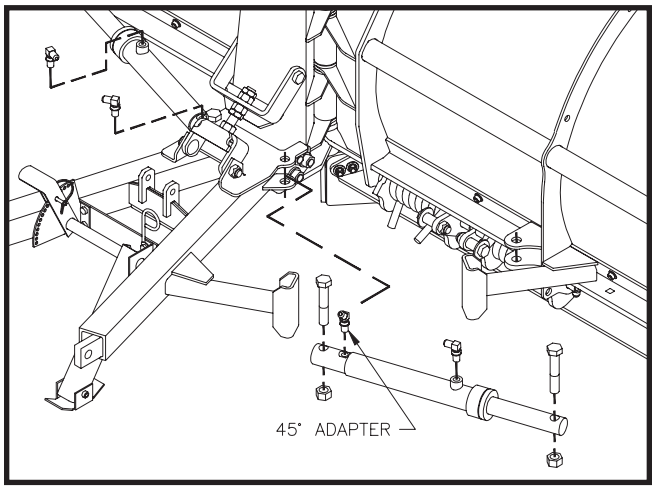

DWG. NO. 7201A

Install the butt end of the two cylinders between lugs on the pushframe using 3/4 inch x 3 1/4 inch hex bolts and lock nuts supplied. Pin the rod end of the cylinders between lugs on the back of the moldboard with 3/4 inch x 3 1/4 inch hex bolts and lock nuts removed earlier.

Turn the O-ring end of the two 90° adapters into the rod end ports of the cylinders so that the flared ends are parallel to the cylinder bodies, directed toward the butt end ports.

Turn the remaining 90° adapter into the butt end port of the LH cylinder so that the flared end is directed rearward and to the left equally between the cylinder body and pushframe tube.

Turn the O-ring end of the 45° adapter into the butt end port of the RH cylinder so that the flared end is directed straight back.

5. Before assembling the power unit on the lift frame, scrape a small amount of paint from the two mount holes in the lift frame to provide a good electrical ground for the turn signals and parking lights.

Mount the power unit on the lift frame with two 3/8 inch x 3/4 inch hex bolts and two 3/8 inch lock washers. The plastic reservoir of the power unit should be to the left side of the of the plow (see following illustration).

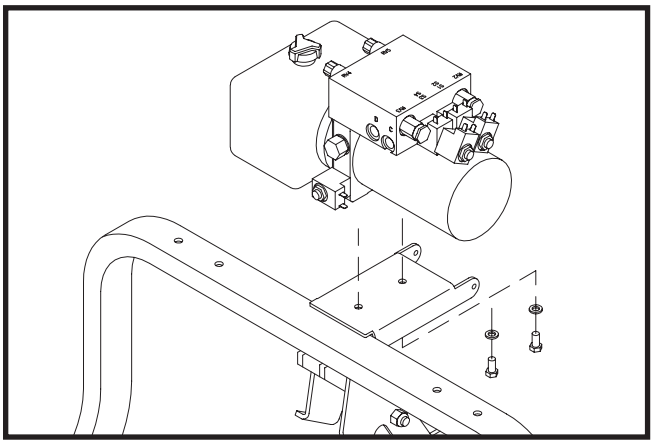

DWG. NO. 6454A

Locate five straight O-ring/flare hydraulic adapters in the hardware bag. Turn the adapters into the five ports on the power unit.

Remove five hydraulic hose assemblies from the parts box. Each hose has a swivel nut on both ends that will assemble to the adapters installed in the cylinders and power unit. Straight hose ends will assemble to adapters in the cylinders and 90° hose ends will assemble to adapters in the power unit. Route all of the hoses ahead of the lift frame tube.

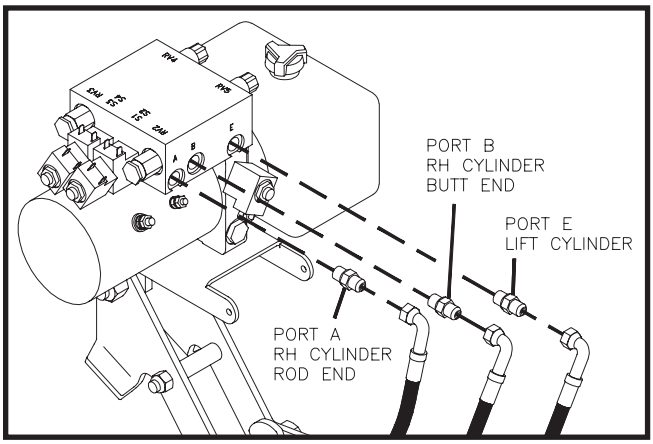

DWG. NO. 6455A

Connect port A on the power unit to the rod end of the RH wing cylinder, using a 54 inch long hose routed through the hose loop on the pushframe.

Connect port B on the power unit to the butt end of the RH wing cylinder, using a 33 inch long hose

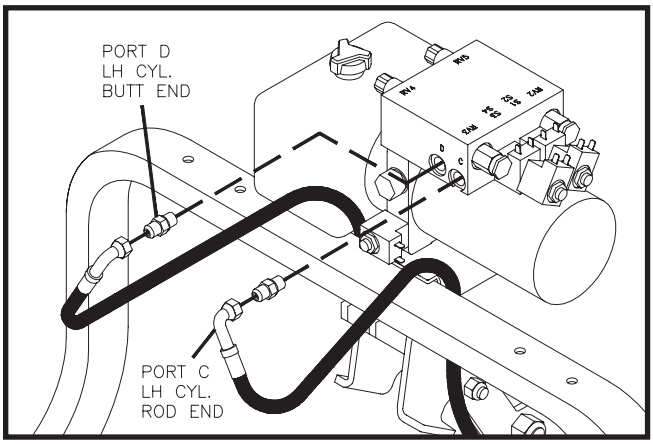

DWG. NO. 6456A

Connect port C on the power unit to the rod end of the LH wing cylinder using the 66 inch long hose routed through the hose loop and under the adjustable brace.

Connect port D on the power unit to the butt end of the LH wing cylinder using a 54 inch long hose routed through the hose loop and behind the adjustable brace.

Connect port E on the power unit to the lift cylinder using a 33 inch long hose.

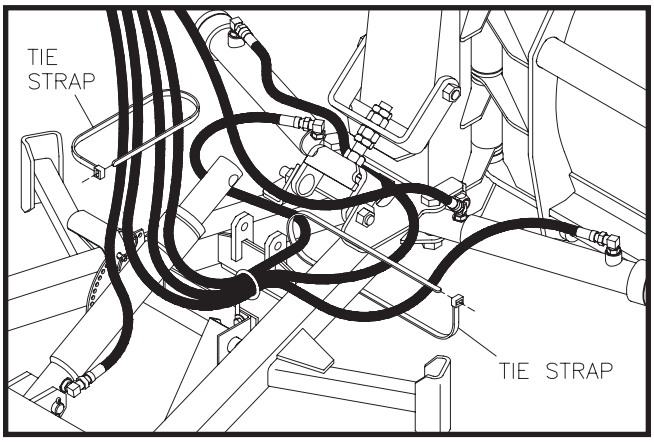

DWG. NO. 7202A

Use a plastic tie strap to band together all hoses except the RH cylinder butt end hose as they hang vertically. Also band together the three hoses routed through the hose loop just ahead of the loop.

6. Before assembling the headlamp brackets on the lift frame tube, scrape a small amount of paint from the three holes in each bracket and the four holes in the frame tube to provide a good electrical ground for the turn signals and parking lights.

Mount the headlamp brackets to the lift frame tube with four 3/8 inch x 2 inch carriage bolts and flanged lock nuts from the hardware bag in the parts box.

Remove the LH and RH headlamps from their boxes and mount on the brackets with hardware from the headlamp boxes.

Use plastic tie straps to band headlamp cables to the brackets at the locations shown to provide clearance for the power unit cover rods later.

Refer to sections titled “System Check-Out” and “Headlamp Aiming Procedure” in this manual for aiming instructions.

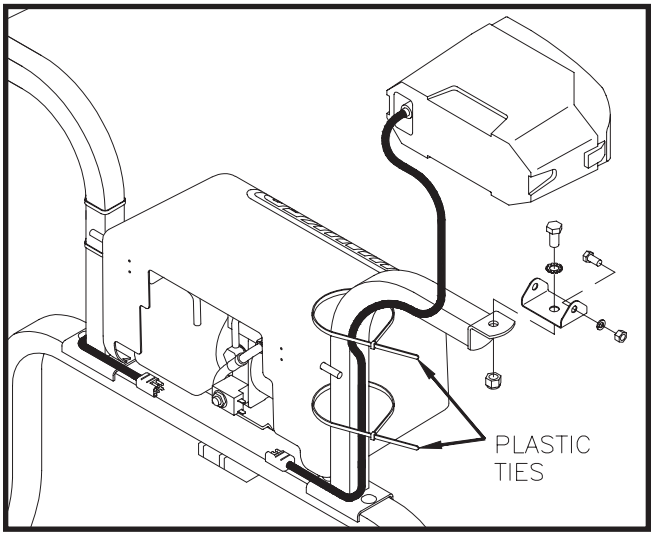

DWG. NO. 6012C

7. Identify the power cable assembly and wiring harness for the plow power unit in the electrical components parts box. A ground harness for solenoids on the power unit is in the power unit box.

The power cable assembly has two cables with ring terminals on one end and a two pin connector on the other, and measures about 38 inches long.

The wiring harness has a 16 pin connector and the other end has connectors labeled “DRIVER SIDE” and “PSNGR SIDE” for the headlamps, and six loose wires with spade receptacles.

The ground wire harness has a ring terminal and six spade receptacles on two wires.

NOTE: To prevent corrosion lightly coat all electrical connections, ring and spade terminals with dielectric grease prior to assembly.

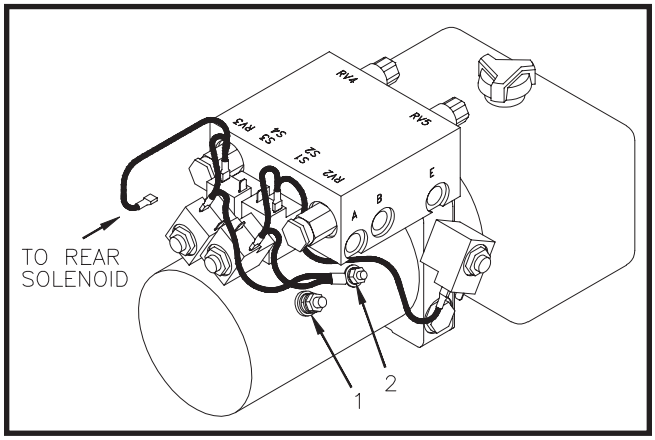

DWG. NO. 5849B

Refer to drawing 5849B. Attach the ring terminal of the solid red (or red striped) wire of the power cable assembly to the terminal on the motor at location 1.

Fasten the ring terminal of the solid black wire of the power cable assembly, and the ring terminal of the ground wire harness to the terminal on the motor at location 2.

Attach the coil ground wire harness as shown.

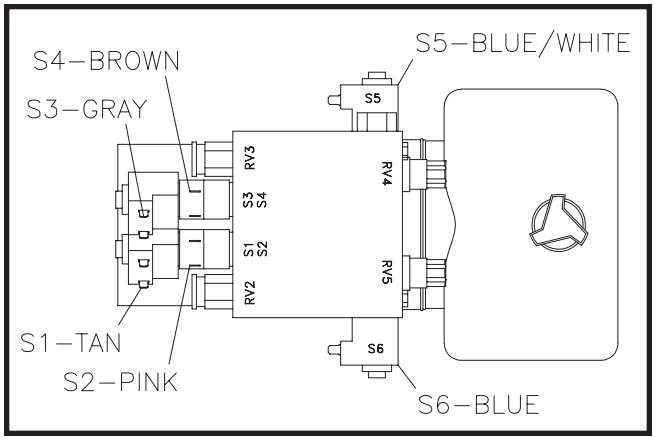

DWG. NO. 5844B

Connect the Tan wire of the wiring harness to the spade terminal on solenoid S1.

Connect the Pink wire to solenoid S2.

Connect the Gray wire to solenoid S3.

Connect the Brown wire to solenoid S4.

Connect the Blue with White stripe wire to solenoid S5.

Connect the Blue wire to solenoid S6.

Connect the RH headlamp to the harness end labeled “PSNGR SIDE” and the LH headlamp to the end labeled “DRIVER SIDE”.

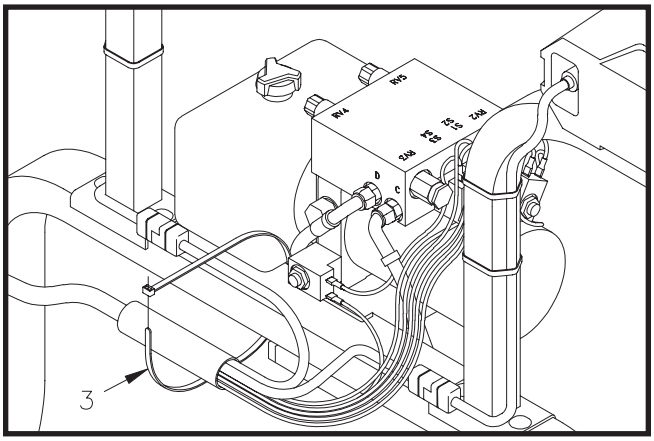

DWG. NO. 6013C

Refer to drawing 6013C. Use a plastic tie strap to band the plow wiring harness to the lift frame tube at location 3. Route wires to the power unit and headlamps, as shown.

NOTE: Install the plow harness so that water does not run down the wires and pool inside the “Y” connection. Position the harness so that any trapped water can easily drain away.

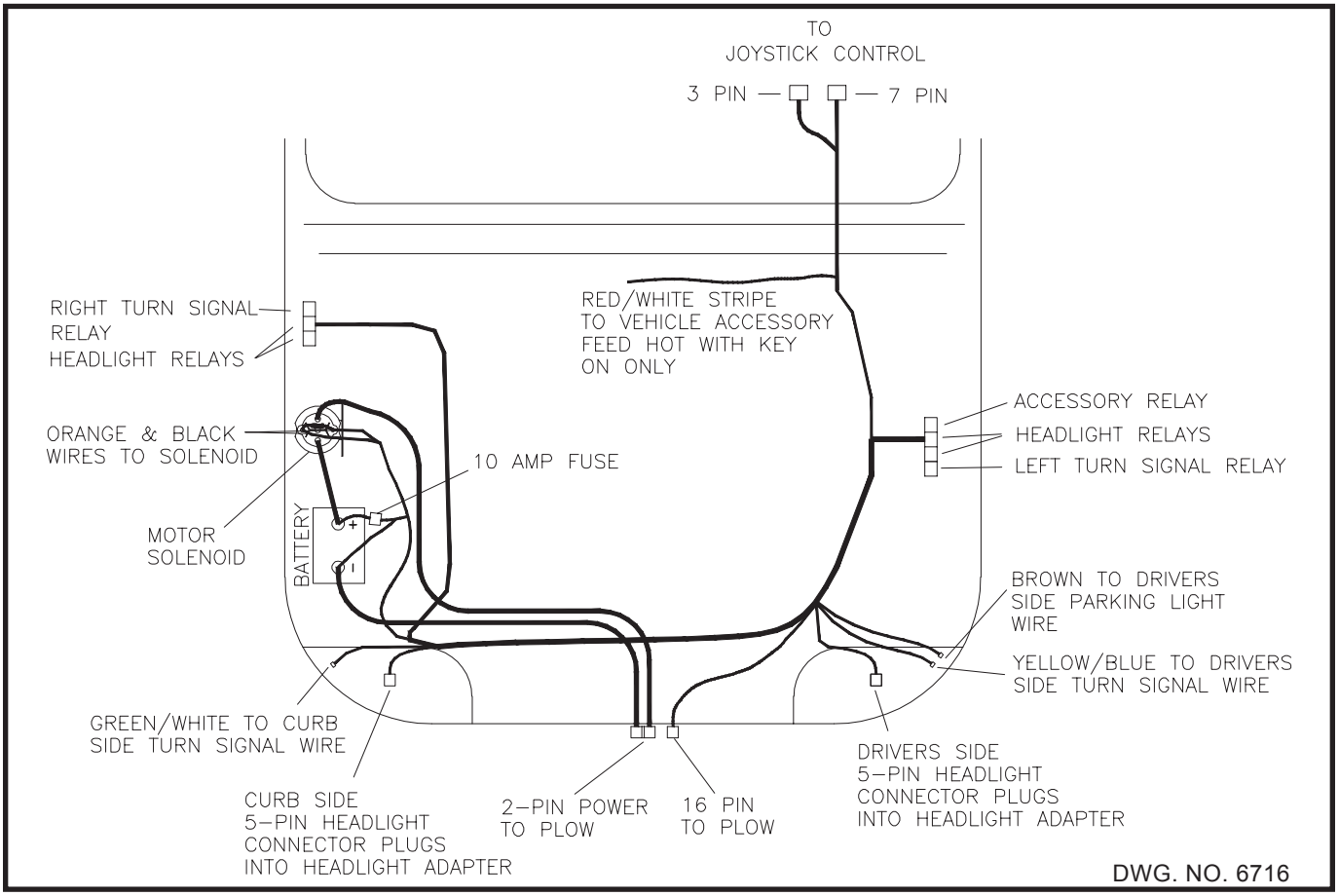

Truck Battery On Passenger Side

WARNING: Disconnect truck battery before beginning electrical installation to avoid shock hazard.

The motor solenoid, underhood wiring harness, power cable and joystick control box are located in the parts box shipped with the snowplow frame.

NOTE: To prevent corrosion, apply a light coat of dielectric grease on all connectors, relays, and terminals before installation.

8. Refer to drawing 6716. Lay the underhood harness in it's approximate position for final assembly with the 7-pin and 3-pin circular connector near the driver's side firewall. Place the 16-pin connector just left of center near the grill, the set of four relays near the driver's side inner fender and the other set near the passenger side inner fender. Place the 5-pin headlight connectors at the respective headlights.

9. Determine the location of the vehicle battery. If the battery is located on the right (passenger) side or if there are two batteries configured as a 12 volt system then proceed to step 10. If the battery is located on the left (driver) side of the vehicle then the wiring harness will need to be modified.

   Refer to drawing 6717. Remove the tape from the black corrugated loom at the points shown. Locate an Orange, Red, and two Black wires. These wires connect to the battery and pump solenoid. Remove the four wires from approximately 33 inches of the loom, making sure the Red and Black wires are long enough to connect to the battery. Tuck these wires back into the loom as shown in the drawing and retape the loom.

10. If there is no access hole in the driver's side firewall then drill a 1-1/8 inch diameter hole. Route the 7-pin and 3-pin circular connector through the firewall into the cab compartment and install the 4 inch grommet in the hole, if required.

CAUTION: Ensure that the relays will clear any hood lift/spring mechanisms before installation.

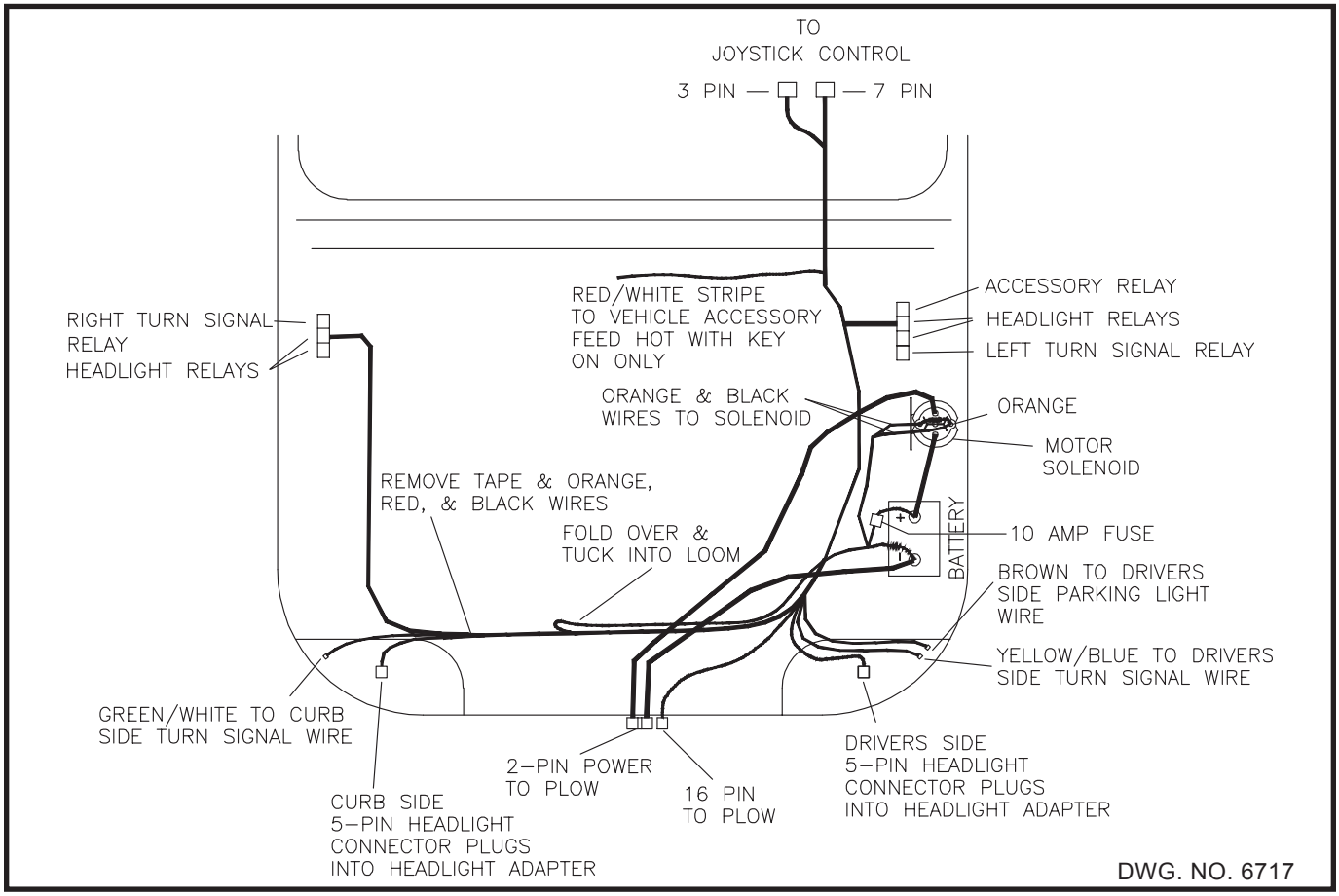

Truck Battery On Driver Side

11. Select an area near the driver's side inner fender to mount the four relay set. Drill two 1/8" diameter holes and secure the relays using #8 x 1/2" self-tapping screws from the hardware bag in the parts box. Apply a light coat of dielectric grease on the relays before inserting into holders.

NOTE: Always mount the relays with the wires pointing down to prevent contamination.

Repeat this procedure and mount the three relay set on the passenger side inner fender.

12. Splice the red with white stripe wire to the vehicle's switched 12 volt auxiliary electrical circuit. This will prevent operation of the plow without the vehicle key being on. This wire controls the accessory relay that powers the control joystick and solenoids.

CAUTION: To prevent injury or property damage caused by unintentional plow movement when the key is removed from the vehicle, the red/white striped wire must be connected to a switched power source on the vehicle. Connecting to a power source not controlled by the ignition switch will allow movement of the plow with the vehicle key removed.

13. Connect the joystick control box to the 7-pin and 3-pin connectors inside the truck cab. Secure the box at a safe location in the cab with the strip of hook and loop fastener.

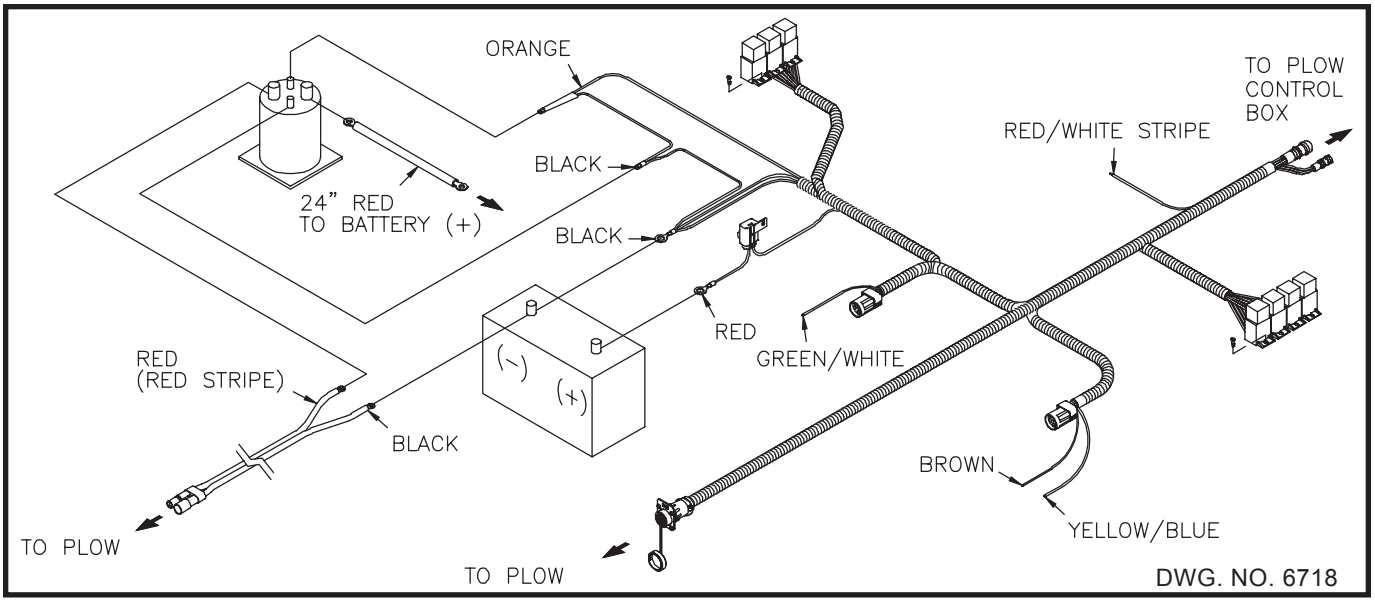

WARNING: Ensure that the motor solenoid and associated wiring will clear any hood lift/spring mechanisms before installation.

IMPORTANT: Do not over tighten nuts on the motor solenoid terminals. Over-tightening causes premature solenoid failure. Refer to torque specifications on the solenoid.

14. Select an area within 16 inches of the vehicle battery for the motor solenoid. Using the solenoid as a template, mark and drill two 3/16 inch diameter holes then fasten the solenoid with two 1/4 inch x 1/2 inch long self tapping screws from the hardware bag in the parts box. Connect the Black wire to one of the small posts on the solenoid, connect the Orange wire to the remaining small post, polarity is not important.

15. Safely route the 16-pin circular connectors through the grill of the vehicle to a location that will be easily accessible with the plow attached.

16. Refer to drawing 6718. Install the underhood power cable by first connecting the Black cable and the three Black wires from the harness to the minus (-) post of the vehicle's battery. Connect the Red (or Red striped) cable to the motor solenoid. Route the power cable to the grill near the 16-pin connector.

    Connect the Red fused wire from the harness and the 24 inch Red cable to the plus (+) terminal of the battery or battery access post. Connect the other end of the 24 inch Red cable to the motor solenoid.

17. Locate three blue connector splices in the hardware bag in the plow's parts box.

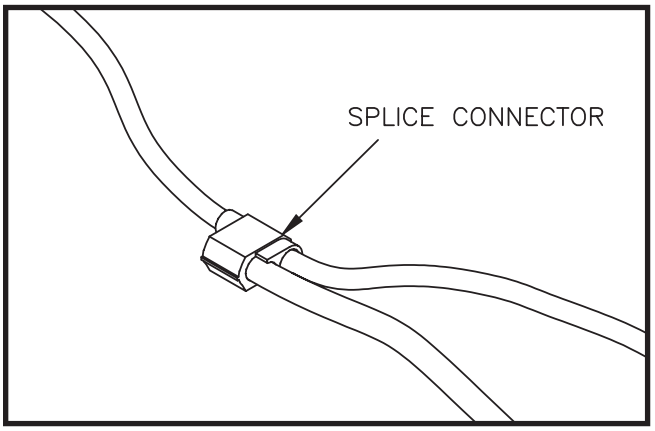

DWG. NO. 4165

Using a blue splice, crimp the single brown wire from the underhood harness into the vehicle's driver's side parking light wire.

Using a blue splice, crimp the single yellow with blue stripe wire from the underhood harness into the vehicle's driver's side turn signal wire.

Using a blue splice, crimp the single green wire with white stripe from the underhood harness into the vehicle's curbside turn signal wire.

18. Select the proper headlight adapter for your vehicle, specific instructions are included with each kit.

    The headlight adapter kit consists of two identical adapters. Install the adapters according to the instructions included with the kit, then connect to the 5-pin connectors of the underhood wiring harness.

19. Secure all cables away from hot or moving components with cable ties.

    This completes the Electrical Installation.

20. At this point, assemble the mount kit on the truck as described in the instructions supplied with each kit.

    Prongs from the truck mount kit should be at a height that will slightly lift the plow frame when attaching the plow.

    Apply powdered graphite on the prongs to help the plow slide on and off more easily.

    Prong receivers on the plow frame must be parallel to the ground before attaching the plow.

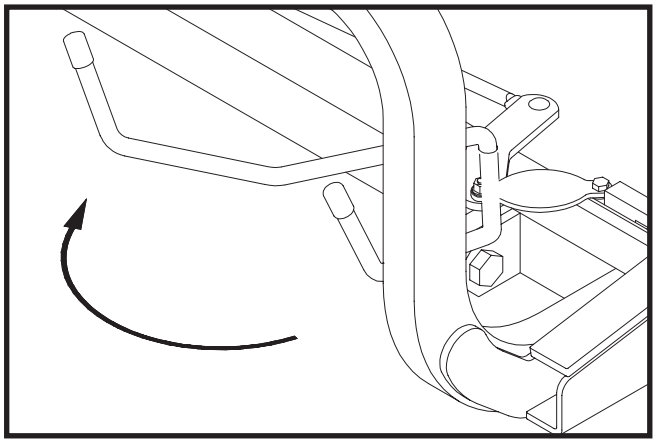

DWG. NO. 6722A

Attach the plow onto the truck by driving the truck prongs into the receivers on the plow frame.

Pull the latch handle into the frame clevis to move sliders through the notches in the prongs and receivers. Pin the handle in the clevis with its klik pin.

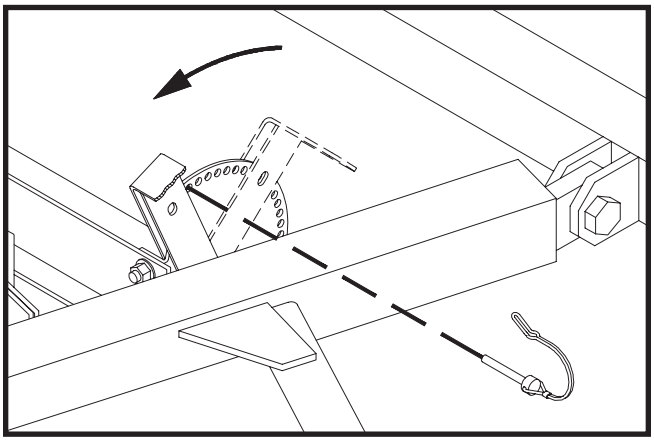

DWG. NO. 7196

Raise the parking stand to its highest position and repin.

Connect the electrical cables from the plow to their corresponding receptacles on the truck.

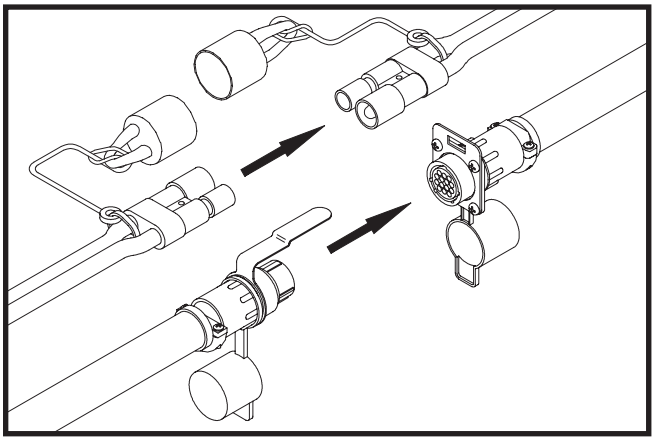

DWG. NO. 6697

21. Select Hiniker Cold Flow Hydraulic Oil or an equivalent oil that meets military specification 5606, for plowing in extremely cold temperatures.

    Pour hydraulic oil into the power unit reservoir until the oil level reaches the fill level.

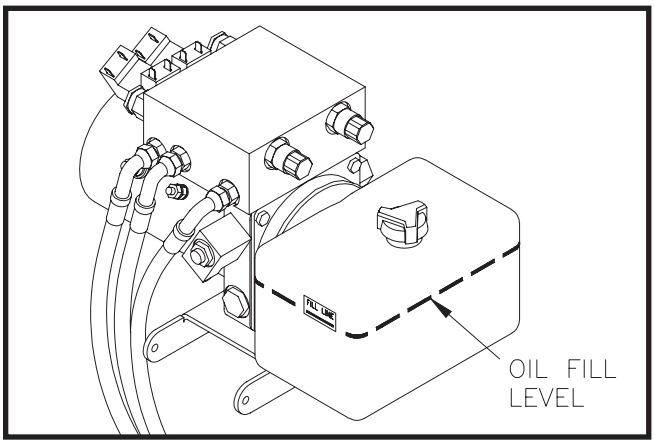

DWG. NO. 6453A

    Raise and lower the plow, and cycle the wings to purge any air trapped in the system. Check the oil level with the plow on the ground and the wings retracted.

    Add oil to the fill line, if necessary, but do not overfill the reservoir.

NOTE: A new hydraulic lift cylinder may leak a small amount of oil until packings become saturated and produce a good seal. If leakage is excessive, or if leaking continues after initial cycling, tighten the cylinder packing nut in 1/8-turn increments until leaking stops.

22. Check that the plow blade is level on the ground with the wings in the scoop position and the plow on the ground.

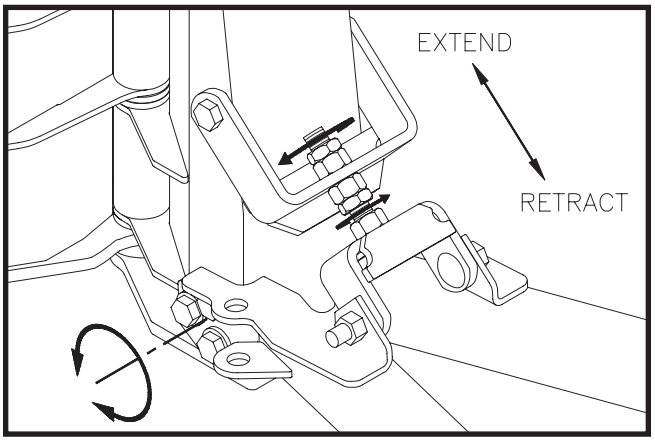

DWG. NO. 7197A

    Loosen the three bolts between the center mast and the front of the push frame, then turn the two sets of hex nuts on the upper channel of the adjustable brace to tilt the center mast forward or back until the cutting edges on the plow are in full contact with the ground.

– Loosen the top nuts and tighten the bottom to tilt the blade forward.

– Loosen the bottom nuts and tighten the top to tilt the blade rearward.

    Fully tighten all hardware after the plow is leveled.

23. Fasten the power unit cover assembly to the lift frame bracket with two 1/4 inch x 3/4 inch screws, flat washers and lock nuts from the hardware bag in the parts box. Tighten the lock nuts so that the assembly is secure, yet the cover hinges freely.

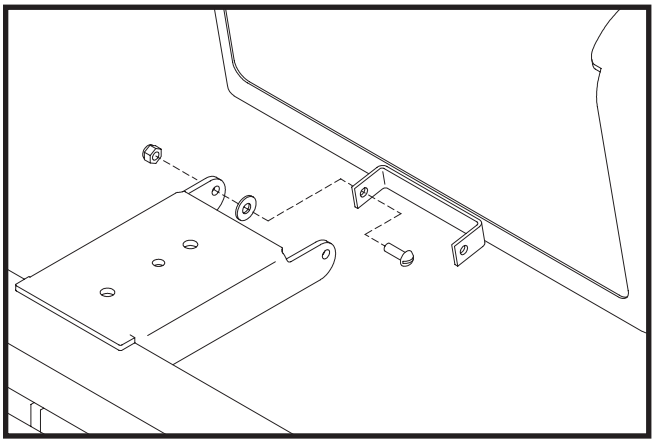

DWG. NO. 6310

When the cover is closed, rods from the latch handles should extend behind the light brackets to hold the cover in place.

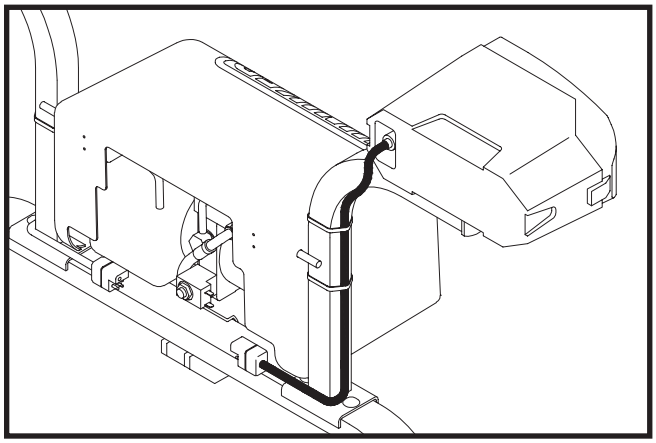

DWG. NO. 6014B

24. Assemble side markers on the ends of the moldboard with 5/16 inch bolts, flat washers and lock nuts.

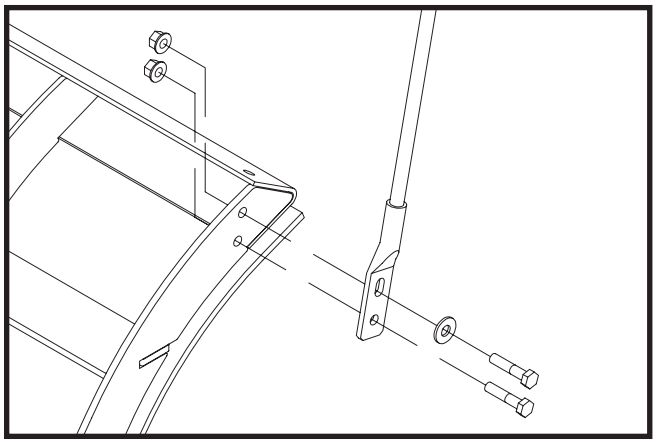

DWG. NO. 6006

SYSTEM CHECK-OUT

NOTE: The power cable and wiring harnesses must be connected between the snowplow and truck to test the functions of the headlights and power unit. Vehicle ignition must be switched on.

1. Move the headlight switch on the joystick controller to the “TRUCK” position and turn on the vehicle headlights. High and low beams should operate on the truck.

2. Move the switch to the “PLOW” position. Plow lights should operate in both high and low beams. Vehicle headlights should be off.

3. Test the parking lights and turn signals. Lights on the plow and truck should operate at the same time.

4. In an area clear of bystanders, test joystick functions by raising and lowering the plow and angling side to side.

   Raise and lower functions may be reversed, as follows.

JOYSTICK CONFIGURATION

As supplied from the factory, the snowplow controller raises the plow when the joystick is pulled backward and lowers the plow when the joystick is pushed forward.

These functions can be reversed by reassembling the joystick switch and face plate.

To reverse the face plate, pry the plate away from the controller by inserting a small screwdriver along the side of the plate at location 1 in drawing 5855. Flip the plate over, then reinstall by gently squeezing the long sides together and sliding the four tabs into slots in the controller top.

To reverse the joystick switch, remove four screws from the back of the controller and remove the main circuit board assembly from the case halves.

Gently pull on the edges of the small circuit board at the base of the joystick switch to remove the switch from the five pins on the main circuit board.

Rotate the switch 90°, then gently push the switch back onto the five pins.

Insert the main circuit board assembly back into the case top, making sure the joystick is properly seated and the harness strain relief is inside the case.

Reassemble the case with the four screws, checking that wires are not pinched between bosses.

Test the controller on the snowplow or a plow tester to verify that raise and lower functions match arrows on the face plate.

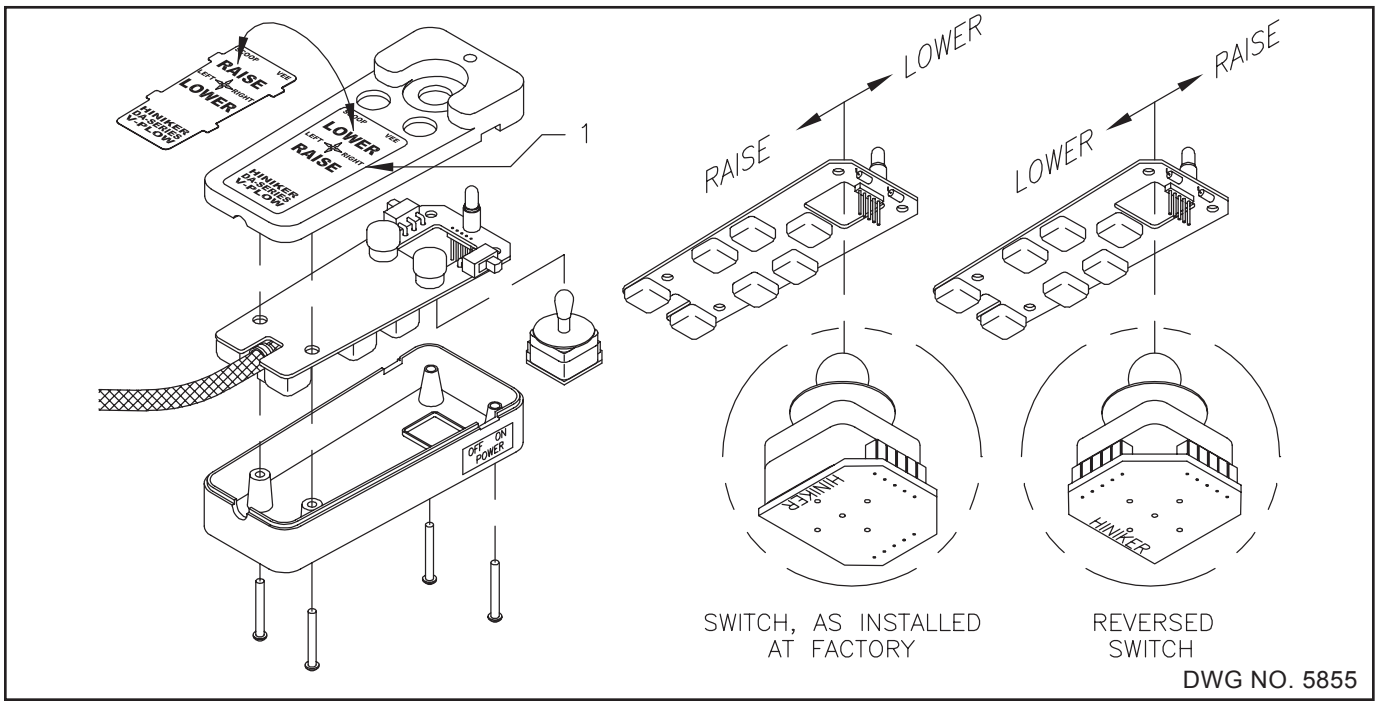

DWG NO. 5855

HEADLAMP AIMING PROCEDURE

1. Park the vehicle with the plow attached on a level surface 25 ft (7.6 m) from a flat, unobstructed light-colored wall.

   With no load on the vehicle other than the driver, snowplow and rear ballast weight, inspect the vehicle for proper tire inflation and broken or sagging suspension components. Check functioning of any automatic vehicle leveling systems and any specific manufacturer's instructions pertaining to vehicle preparation for headlamp aiming. Stabilize the suspension by rocking the vehicle sideways.

2. Mark a vertical line (line 1) on the wall with black tape, or other means, directly ahead of the center of the vehicle.

   Mark two additional vertical lines (lines 3 and 4) offset 20 1/2 inches (52 cm) from the first line representing the distance between the two plow headlamps.

3. Measure the height from the ground to the center of the plow headlamps, then mark a horizontal line (line 2) on the wall at that same height.

4. Refer to the following chart then mark a second horizontal line below the first (line 5), as required.

Headlamp Centerline Height	Vertical Aim Down
22 to 36 in (56 to 90 cm)	0
36 to 48 in (90 to 120 cm)	2 in (5 cm) Down
48 to 54 in (120 to 140 cm)	4 in (6.4 cm) Down

5. Wipe the lamp lenses clean and check for proper switching and function.

   Activate the plow lamp HIGH beams to illuminate toward the wall. Focus the center of the LH light beam on the intersection of lines 3 and 5. Focus the center of the RH light beam on the intersection of lines 4 and 5.

   Tighten the headlamp mounting hardware to 70 ft.-lbs. (95 N-m) maximum to hold the headlamps in position.

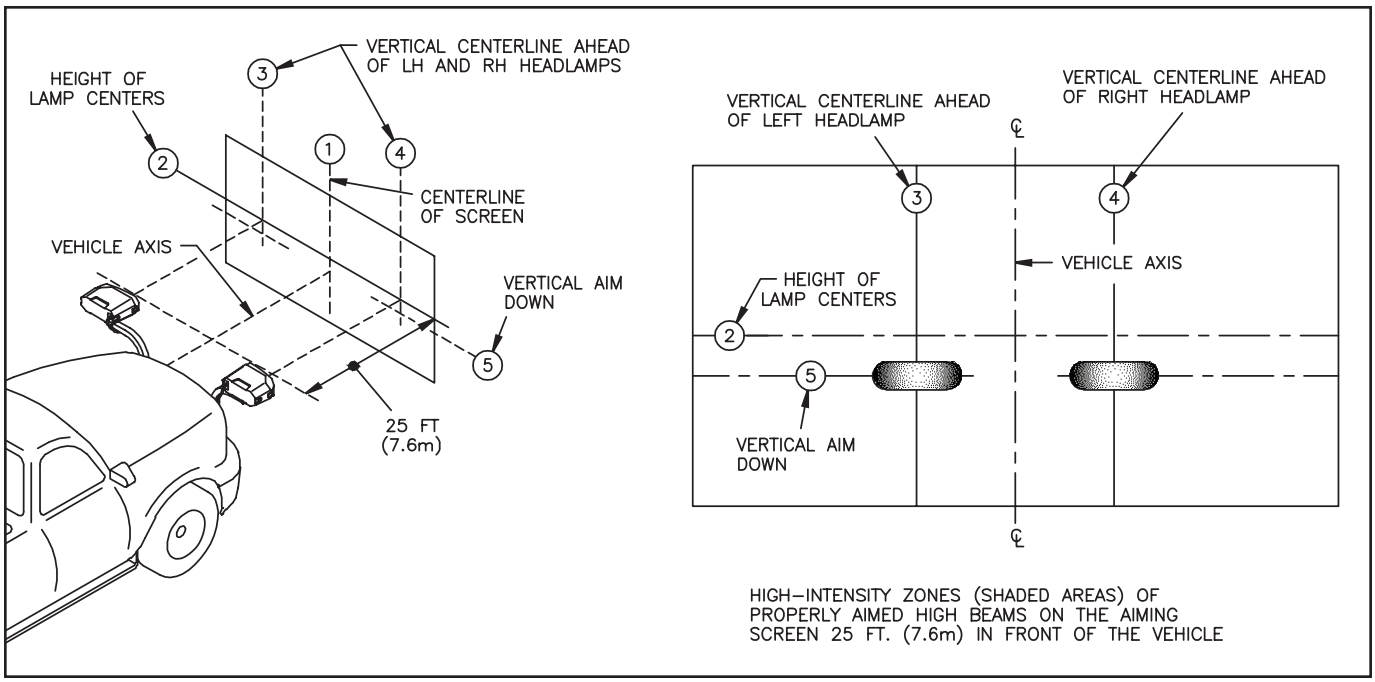

DWG NO. 6598A

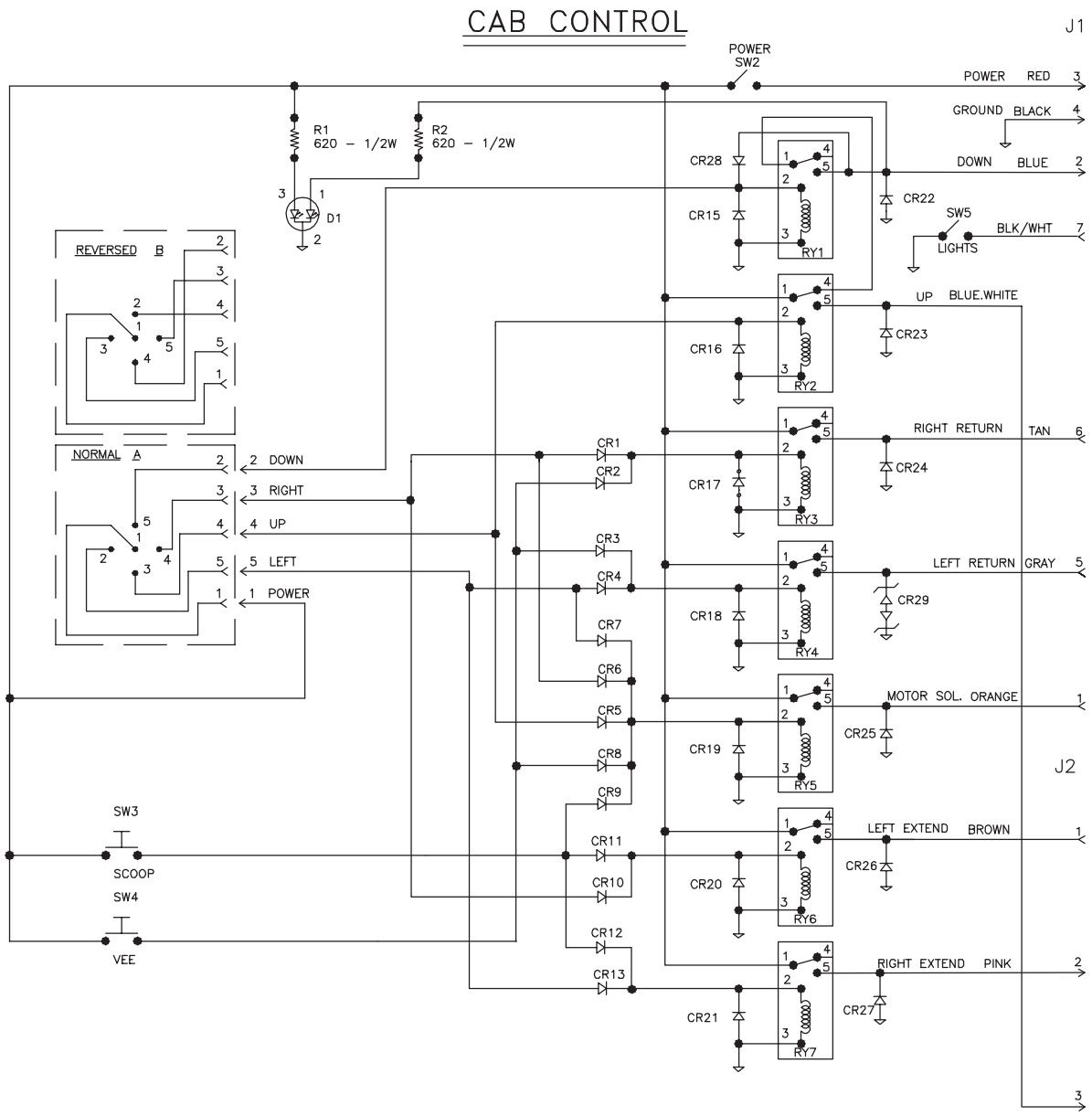
CAB CONTROL
J1
POWER SW2
POWER RED 3
GROUND BLACK 4
DOWN BLUE 2
SW5
LIGHTS
BLK/WHT 7
UP BLUE.WHITE
RIGHT RETURN TAN 6
LEFT RETURN GRAY 5
MOTOR SOL. ORANGE 1
LEFT EXTEND BROWN 1
RIGHT EXTEND PINK 2
3
J2
R1 620 – 1/2W
R2 620 – 1/2W
D1
REVERSED B
NORMAL A
2 DOWN
3 RIGHT
4 UP
5 LEFT
1 POWER
SW3
SCOOP
SW4
VEE
CR1
CR2
CR3
CR4
CR5
CR6
CR7
CR8
CR9
CR10
CR11
CR12
CR13
CR15
CR16
CR17
CR18
CR19
CR20
CR21
CR22
CR23
CR24
CR25
CR26
CR27
CR28
CR29
RY1
RY2
RY3
RY4
RY5
RY6
RY7

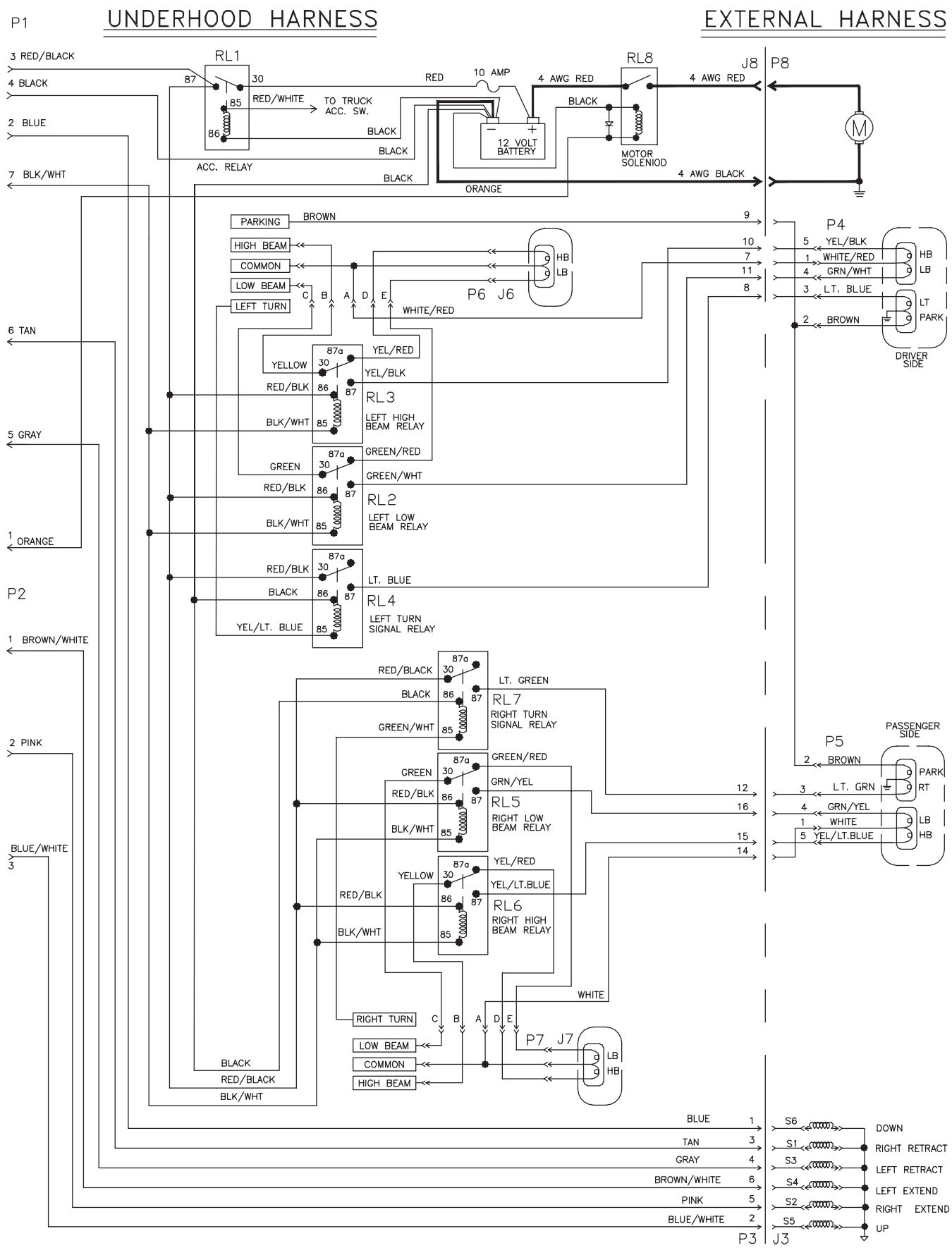
UNDERHOOD HARNESS
EXTERNAL HARNESS
P1
3 RED/BLACK
4 BLACK
2 BLUE
7 BLK/WHT
6 TAN
5 GRAY
1 ORANGE
P2
1 BROWN/WHITE
2 PINK
BLUE/WHITE 3
RL1
ACC. RELAY
RED/WHITE
TO TRUCK ACC. SW.
RED
10 AMP
4 AWG RED
RL8
MOTOR SOLENIOD
12 VOLT BATTERY
BLACK
ORANGE
4 AWG BLACK
J8
P8
PARKING
BROWN
HIGH BEAM
COMMON
LOW BEAM
LEFT TURN
P6 J6
WHITE/RED
YELLOW
YEL/RED
YEL/BLK
RED/BLK
BLK/WHT
RL3
LEFT HIGH BEAM RELAY
GREEN
GREEN/RED
GREEN/WHT
RL2
LEFT LOW BEAM RELAY
LT. BLUE
RL4
LEFT TURN SIGNAL RELAY
YEL/LT. BLUE
RL7
RIGHT TURN SIGNAL RELAY
LT. GREEN
GRN/YEL
RL5
RIGHT LOW BEAM RELAY
YEL/LT.BLUE
RL6
RIGHT HIGH BEAM RELAY
WHITE
RIGHT TURN
P7 J7
P4
YEL/BLK
WHITE/RED
GRN/WHT
LT. BLUE
BROWN
HB
LB
LT
PARK
DRIVER SIDE
PASSENGER SIDE
P5
LT. GRN
GRN/YEL
WHITE
YEL/LT.BLUE
RT
BLUE
TAN
GRAY
BROWN/WHITE
PINK
BLUE/WHITE
S6
S1
S3
S4
S2
S5
DOWN
RIGHT RETRACT
LEFT RETRACT
LEFT EXTEND
RIGHT EXTEND
UP
P3 J3

DWG NO. 6719A

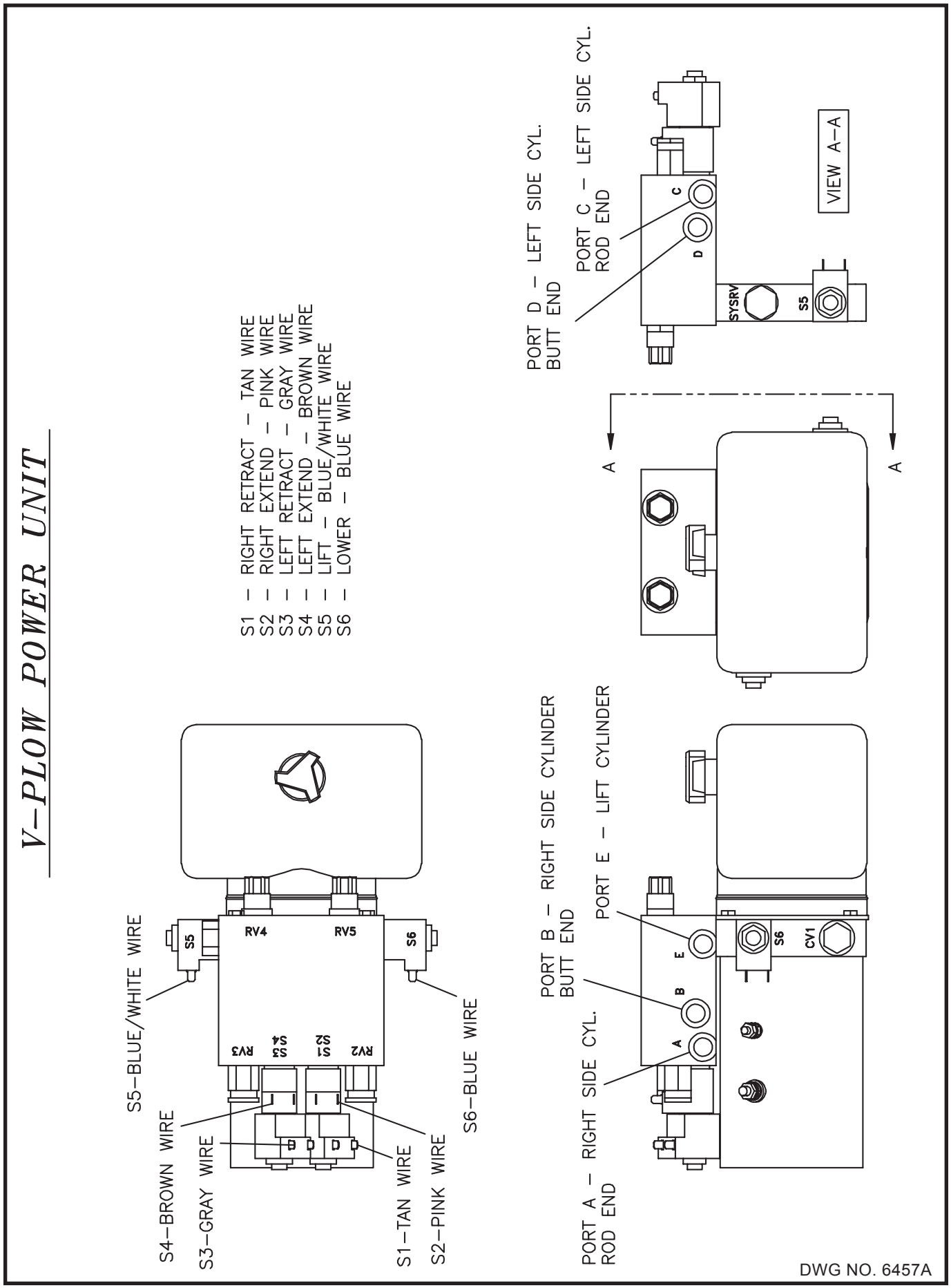
V–PLOW POWER UNIT
S1 – RIGHT RETRACT – TAN WIRE
S2 – RIGHT EXTEND – PINK WIRE
S3 – LEFT RETRACT – GRAY WIRE
S4 – LEFT EXTEND – BROWN WIRE
S5 – LIFT – BLUE/WHITE WIRE
S6 – LOWER – BLUE WIRE
PORT D – LEFT SIDE CYL. BUTT END
PORT C – LEFT SIDE CYL. ROD END
VIEW A–A
SYSRV
S5
C
D
A
A
S5–BLUE/WHITE WIRE
S4–BROWN WIRE
S3–GRAY WIRE
S1–TAN WIRE
S2–PINK WIRE
S6–BLUE WIRE
RV4
RV5
RV3
S3
S4
S1
S2
RV2
S5
S6
PORT B – RIGHT SIDE CYLINDER BUTT END
PORT E – LIFT CYLINDER
PORT A – RIGHT SIDE CYL. ROD END
A
B
E
S6
CV1
DWG NO. 6457A

POWER UNIT HYDRAULIC CIRCUIT DIAGRAM

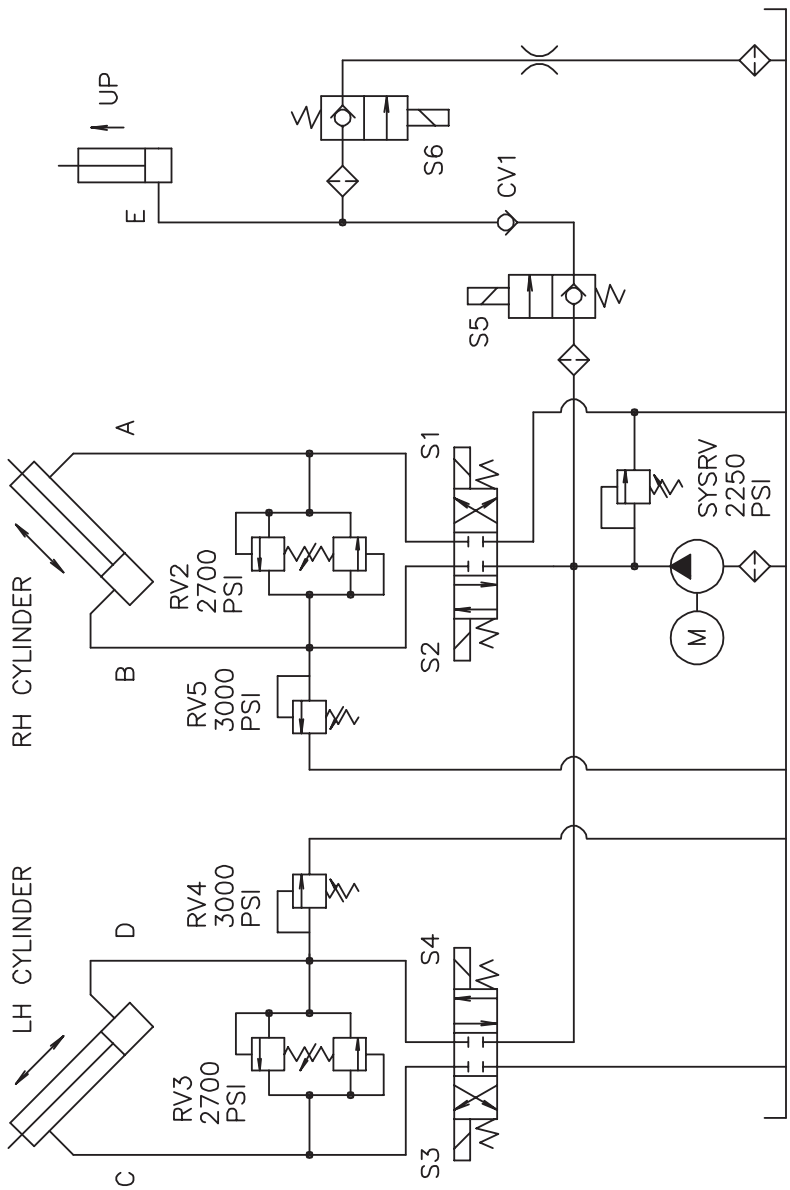

FUNCTION	S1	S2	S3	S4	S5	S6	MOTOR
VEE	X		X				X
SCOOP		X		X			X
ANGLE LEFT		X	X				X
ANGLE RIGHT	X			X			X
LIFT					X		X
LOWER						X	

SYSRV – RELIEF VALVE, SYSTEM, 2250 PSI
RV2 – RELIEF VALVE, RH CYL. CROSSOVER, 2700 PSI
RV3 – RELIEF VALVE, LH CYL. CROSSOVER, 2700 PSI
RV4 – RELIEF VALVE, LH CYL. RETRACTION, 3000 PSI
RV5 – RELIEF VALVE, RH CYL. RETRACTION, 3000 PSI

DWG NO. 6459

SPECIFICATIONS

	8 1/2’ Plow	9 1/2’ Plow
BLADE HEIGHT	30”-37”	30”-38”
WEIGHT w/o SNOW DEFLECTOR (Does Not Include Weight Of Mount Kit)	740 lbs	773 lbs
PLOW WIDTH - STRAIGHT	8’ 6”	9’ 6”
PLOW WIDTH - “V” POSITION	7’ 9”	8’ 7”
PLOW WIDTH - SCOOP POSITION	7’ 0”	7’ 10”
PLOW WIDTH - ANGLED 30°	7’ 4”	8’ 3”
CUTTING EDGE	1/2” x 6” 1084 Steel (Optional)	
RECOMMENDED HYDRAULIC FLUID	Hiniker Cold Flow Mil Spec 5606 Or Equivalent	
HYDRAULIC FLUID CAPACITY	3 Quarts	
HIGH BEAM HEADLIGHT BULB	One #H1 12V, 55W	
LOW BEAM HEADLIGHT BULB	One #H7 12V, 55W	
TURN SIGNAL/PARKING BULB	One #1157 Heavy Duty Double Contact 32/3 C.P	
MOTOR SOLENOID	12 VDC Solenoid Continuous Duty, Sealed	
WIRING HARNESS FUSE	10 AMP	

HINIKER WARRANTY

HINIKER SNOWPLOW LIMITED WARRANTY

The only warranty Hiniker Company (Hiniker) gives and the only warranty that any Hiniker dealer is authorized to give on behalf of Hiniker is as follows: **(NO EMPLOYEE OR REPRESENTATIVE IS AUTHORIZED TO CHANGE THIS WARRANTY IN ANY WAY OR GRANT ANY OTHER WARRANTY.)**

Hiniker warrants to the original purchaser of a Hiniker snowplow that Hiniker will repair or replace any defects in material and workmanship that occur within two years from date of retail delivery except the following items: Hiniker warrants that it will repair or replace any defects in materials or workmanship with respect to the paint finish, any accessories, and service parts and components for a period of one year from date of retail delivery.

Hiniker's obligation and liability under this warranty is expressly limited to repairing or replacing, at Hiniker's option, at an authorized Hiniker dealer location, the defective parts at no charge to the original purchaser. **HINIKER MAKES NO OTHER WARRANTY, EXPRESS OR IMPLIED AND MAKES NO WARRANTY OF MERCHANTABILITY OR OF FITNESS FOR ANY PARTICULAR PURPOSE.**

HINIKER'S OBLIGATION UNDER THIS WARRANTY SHALL NOT INCLUDE ANY TRANSPORTATION CHARGES TO OR FROM THE AUTHORIZED HINIKER DEALER LOCATION OR ANY LIABILITY FOR INCIDENTAL, INDIRECT OR CONSEQUENTIAL DAMAGE OR DAMAGES OF ANY KIND FOR LOST PROFITS OR DELAY. If requested by Hiniker, products or parts for which a warranty claim is made are to be returned freight prepaid to our factory. Any improper use, operation beyond rated capacity, substitution of parts not approved by Hiniker Company, or any alteration or repair in such manner as in our judgment affects the product materially and adversely shall void this warranty.

Hiniker reserves the right to make improvements or changes to any of it's products without notice. Such improvements or changes shall not trigger any obligation by Hiniker to update, modify or change any products previously sold by Hiniker.

HINIKER does not warrant the following:

1. Used products.
2. Any product that has been repaired, modified or altered in a way not approved by Hiniker Company.
3. Depreciation or damage caused by normal wear, lack of reasonable and proper maintenance, failure to follow Operators Manual Instructions, misuse, lack of proper protection during storage, or accident.
4. Parts replacement and service necessitated by normal wear or maintenance including, but not limited to, cutting edges, hoses, snowplow skid shoes, blade marker guides and hardware.
5. Paint finish damage caused by normal wear.

Hiniker does not assume any liability for any damage to a motor vehicle resulting from the attachment or use of a Hiniker snowplow. Compliance with applicable motor vehicle regulations is the responsibility of the installer. Attachment of a Hiniker snowplow to a motor vehicle is at the risk of the purchaser.

It is the responsibility of the original snowplow purchaser to verify the original date of purchase.

A DELIVERY REPORT FORM must be filled out and received by Hiniker with 30 days of retail delivery at the address below to initiate the warranty coverage.

HINIKER COMPANY
58766 240th St.
P.O. Box 3407
MANKATO, MN 56002-3407
PHONE (507) 625-6621 -- FAX (507) 625-5883
www.hiniker.com