SECTION 6
POLY TRIP EDGE SCOOP PLOW

FOR SERIES 6800 & 6900

PLOW COMPONENTS

PAGE 2 MOLDBOARD ASSEMBLY
PAGE 4 QUADRANT/PUSH FRAME ASSEMBLY
PAGE 5 LIFT FRAME ASSEMBLY
PAGE 6 POWER UNIT COVER ASSEMBLY
POLY SNOW DEFLECTOR KITS
PAGE 7 1/2” THICK CUTTING EDGES
RUBBER CUTTING EDGES
PAGE 8 WEAR PLATE KIT
CURB GUARD KITS

HYDRAULIC COMPONENTS

PAGE 9 HYDRAULIC OVERVIEW
HYDRAULIC CYLINDERS
PAGE 10 POWER UNIT - SPX MODEL DB-7929-2
PAGE 11 POWER UNIT - SPX MODEL DB-1600

ELECTRICAL COMPONENTS

PAGE 12 UNDERHOOD WIRING HARNESS
MOTOR SOLENOID
PAGE 13 PLOW WIRING HARNESS
JOYSTICK CONTROLLER
PAGE 14 COMPOSITE HEADLAMPS
SEALED BEAM HEADLAMPS
PAGE 15 POWER CABLES
GRILL MOUNT PLATE

MOLDBOARD ASSEMBLY

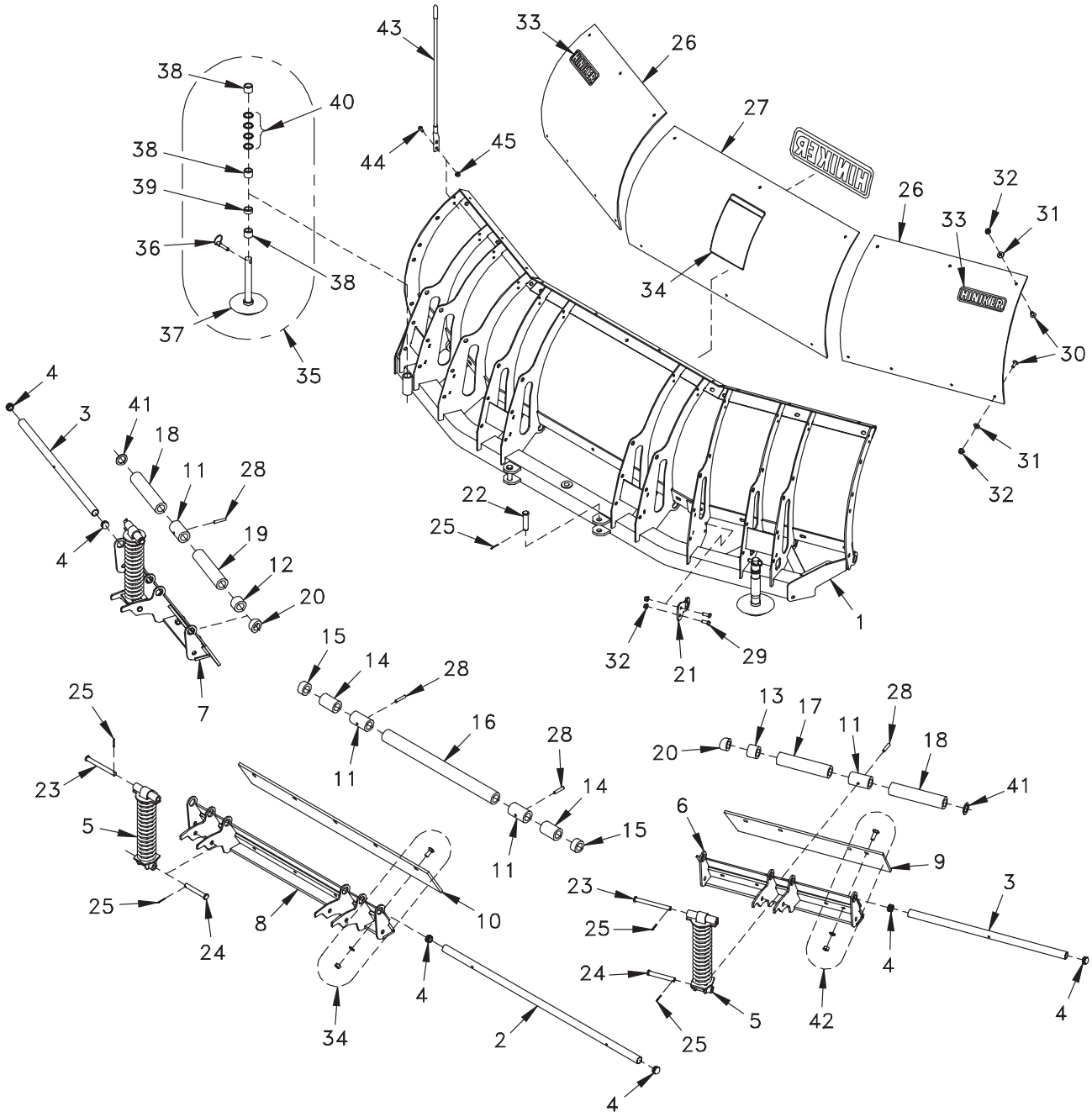

DWG. NO. 5881A

POLY SCOOP PLOW 6800-6900

REF. NO.	PART NUMBER	DESCRIPTION	QTY.
1	25011653	Scoop Frame Weldment-8' Plow (Shown)	1
	25012621	Scoop Frame Weldment-9' Plow	1
2	25012617	Middle Trip Pin-8' Plow	1
	25012620	Middle Trip Pin-9' Plow	1
3	25012618	End Trip Pin	2
4	25012375	End Cap	6
5	25011373	Spring Assembly	4
6	25011542	RH Trip Edge Weldment	1
7	25011541	LH Trip Edge Weldment	1
8	25011655	Middle Trip Edge Weldment-8' Plow	1
	25011531	Middle Trip Edge Weldment-9' Plow	1
9	25011572	End Cutting Edge	2
10	25011631	Middle Cutting Edge-8' Plow	1
	25011571	Middle Cutting Edge-9' Plow	1
11	25011341	Bushing, 3 3/8" Lg Steel	4
12	25011719	Bushing, 1 1/2" Lg Poly	1
13	25011570	Bushing, 1 11/16" Lg Poly	1
14	25011634	Bushing, 3" Lg Poly-8' Plow	2
	25011566	Bushing, 8 11/16" Lg Poly-9 Plow	2
15	25011568	Bushing, 1" Lg Poly	2
16	25011567	Bushing, 24 5/16" Lg Poly	1
17	25011566	Bushing, 8 11/16" Lg Poly	1
18	25011565	Bushing, 9 5/16" Lg Poly	2
19	25011564	Bushing, 8 7/8" Lg Poly	1
20	25011563	Angled Bushing, 1 1/8" Lg Poly	2
21	25011562	Middle Shaft Support	1
22	953-002-032	Clevis Pin 3/4 x 3	2
23	953-002-045	Clevis Pin 5/8 x 6	4
24	953-002-044	Clevis Pin 5/8 x 4 3/8	4
25	035-42033	Cotter Pin 5/32 x 1 1/4	10
26	25011559	Poly Moldboard Blank-End	2
27	25012191	Poly Moldboard Blank/Decal Assembly-8' Plow	1
	25012192	Poly Moldboard Blank/Decal Assembly-9' Plow	1
28	30009024	Slotted Spring Pin 3/8 x 2	4
29	950-001-324	Hex Head Cap Screw 3/8-16 x 3/4 Gr. 8	2
30	700-11704	Machine Screw 3/8-16 x 1" Slotted Truss Head -8' Plow	20
	700-11704	Machine Screw 3/8-16 x 1" Slotted Truss Head -9' Plow	22
31	952-002-013	Flat Washer 3/8 Inch, Stainless Steel-8' Plow	20
	952-002-013	Flat Washer 3/8 Inch, Stainless Steel-9' Plow	22
32	951-005-003	Lock Nut 3/8-16 Mac Lock-8' Plow	22
	951-005-003	Lock Nut 3/8-16 Mac Lock-9' Plow	24
33	25011684	Hiniker Decal	2
34	25012270	Snowplow Removal Decal	1
35	25011487	Cast Iron Skid Assembly	2
36	25010319	Klik Pin	2
37	25011478	Cast Iron Skid Shoe	2
38	25010049	1" Skid Spacer	6
39	25010048	1/2" Skid Spacer	2
40	952-004-071	Machinery Bushing 1 5/32 x 1 1/2 x 10 Ga.	8
41	952-004-076	Machinery Bushing 1 1/4 x 1 7/8 x 10 Ga.	2
42	25011578	Cutting Edge Bolt Kit	1
43	25010118	Blade Guide Red	2
44	950-001-113	Hex Head Cap Screw 5/16-18 x 3/4 Gr. 5	4
45	951-005-036	Lock Nut 5/16-18 Mac Lock	4

QUADRANT/PUSH FRAME ASSEMBLY

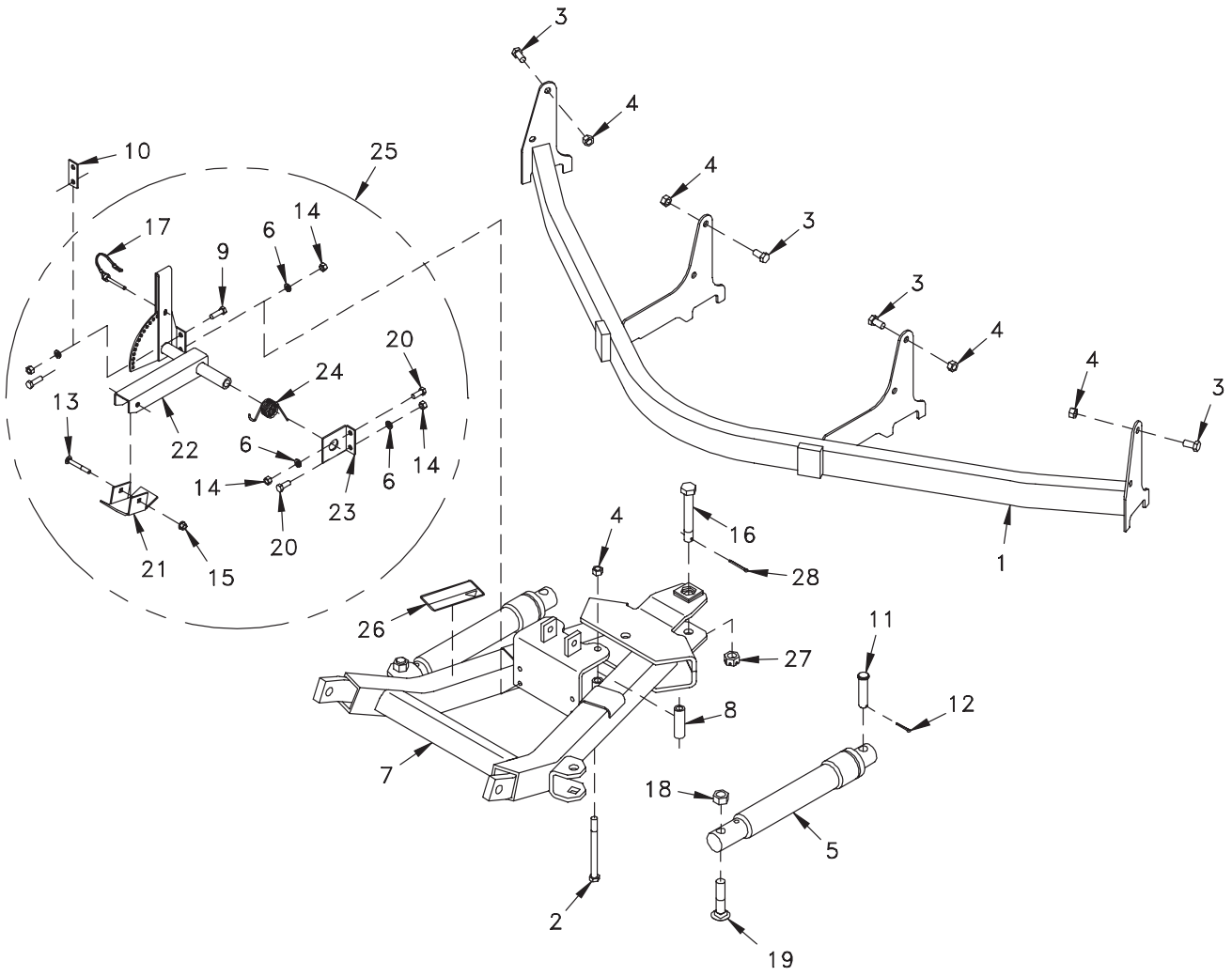

DWG. NO. 5460B

REF. NO.	PART NUMBER	DESCRIPTION	QTY.	REF. NO.	PART NUMBER	DESCRIPTION	QTY.
1	25011656	8 Ft. Scoop Quadrant Weldment (Shown)	1	14	951-001-005	Hex Nut 3/8-16 Inch	4
	25012624	9 Ft. Scoop Quadrant Weldment	1	15	951-005-036	Lock Nut 5/16-18 Mac Lock	1
2	031-06219	Hex Head Cap Screw 1/2-13 x 6 Gr. 5	2	16	25012614	Drilled Bolt 3/4-10 x 5 Gr. 5	1
3	950-001-231	Hex Head Cap Screw 1/2-13 x 1 Gr. 5 (8 Ft Plow)	8	17	25010797	Tab Lock Pin, 1/4 x 2	1
	950-001-231	Hex Head Cap Screw 1/2-13 x 1 Gr. 5 (9 Ft Plow)	12	18	951-005-037	Lock Nut 3/4-10 2-Way	2
4	10304	Lock Nut 1/2-13 2-Way (8 Ft Plow)	10	19	030-16198	Carriage Bolt 3/4-10 x 3 1/2 Gr. 5	2
	10304	Lock Nut 1/2-13 2-Way (9 Ft Plow)	14	20	950-001-105	Hex Head Cap Screw 3/8-16 x 1 Gr. 5	2
5	25010523	1/2 x 10 SA Cylinder (See Sec. 6 Pg. 9)	2	21	25010801	Stand Foot	1
6	952-001-007	Lock Washer 3/8 Inch	4	22	25010800	Lever Weldment	1
7	25012483	Push Frame Weldment/Decal Assembly	1	23	25010798	Bracket	1
8	25011477	2 13/16" Bushing	2	24	25010795	Helical Torsion Spring	1
9	950-001-106	Hex Head Cap Screw 3/8 x 1 1/4 Gr. 5	2	25	25011050	Park Stand Kit	1
10	25011486	Parking Stand Spacer	1	26	25010697	Caution Decal	1
11	953-002-032	Clevis Pin 3/4 x 3	2	27	034-00136	Slotted Nut 3/4-10	1
12	035-42033	Cotter Pin 5/32 x 1 1/4	2	28	953-001-008	Cotter Pin 3/16 x 1 3/4	1
13	950-003-074	Carriage Bolt 5/16 x 2 1/2 Gr. 5	1				

LIFT FRAME ASSEMBLY

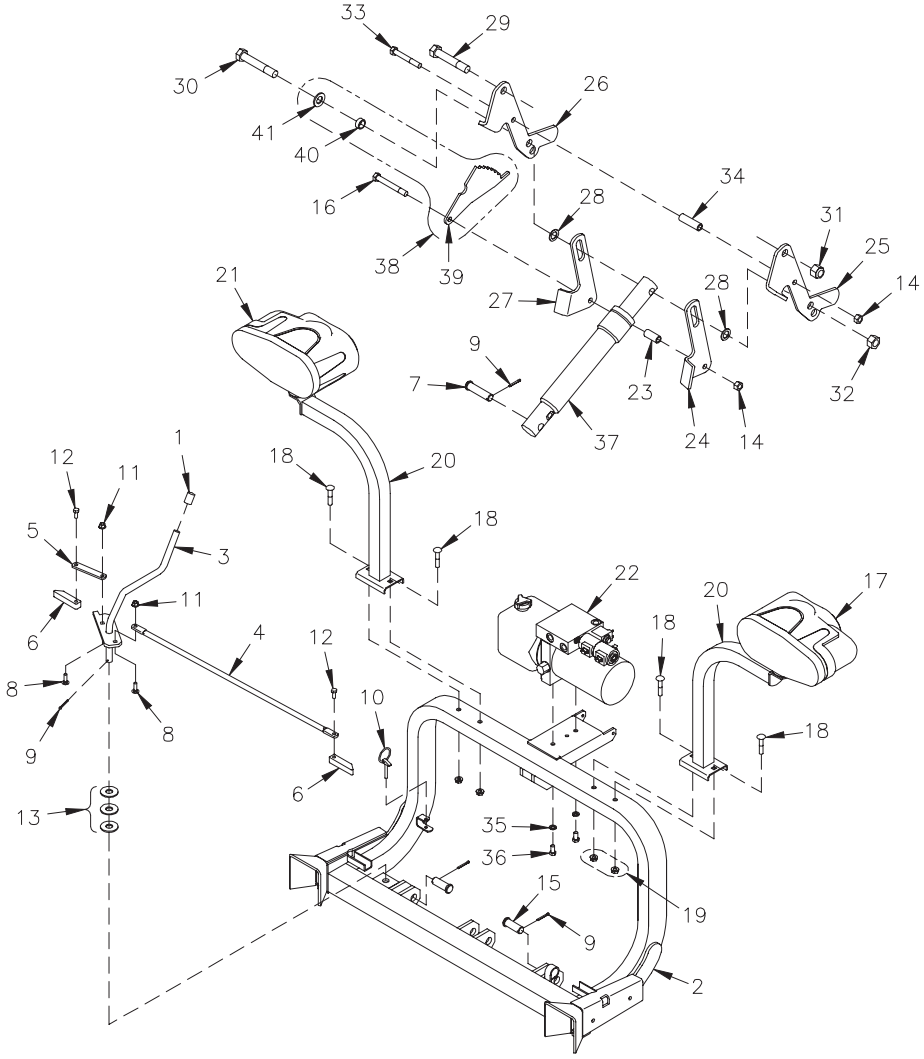

DWG. NO. 5734A

REF. NO.	PART NUMBER	DESCRIPTION	QTY.	REF. NO.	PART NUMBER	DESCRIPTION	QTY.
1	25011230	Vinyl Cap	1	24	25012396	RH Lower Link, 5/16” Thick	1
2	25012583	Frame Weldment	1		25010390	RH Lower Link, 1/4” Thick	1
3	25010410	Handle Weldment	1	25	25012394	RH Upper Link, 5/16” Thick	1
4	25010274	Long Tie Rod	1		25011045	RH Upper Link, 1/4” Thick	1
5	25010275	Short Tie Rod	1	26	25012393	LH Upper Link, 5/16” Thick	1
6	25010276	Slider	2		25011044	LH Upper Link, 1/4” Thick	1
7	953-002-032	Clevis Pin 3/4 x 3 Gr. 5	1	27	25012395	LH Lower Link, 5/16” Thick	1
8	030-16042	Carriage Bolt 5/16-18 x 1 Gr. 5	2		25010389	LH Lower Link, 1/4” Thick	1
9	035-42033	Cotter Pin 5/32 x 1 1/4	4	28	952-004-003	Machine Bushing	2
10	703-00209	Klik Pin	1	29	950-001-310	Hex Head Cap Screw 3/4-10 x 4 1/4 Gr. 5, 1 1/4 Thd Lgth	1
11	951-005-036	Lock Nut 5/16-18 Mac Lock	2	30	950-001-311	Hex Head Cap Screw 3/4-10 x 4 1/2 Gr. 5, 1 1/4 Thd Lgth	1
12	950-011-042	Hex Head Cap Screw 5/16-18 x 3/4 Nylon Dri-Loc	2	31	951-003-010	Lock Nut 3/4-10 Nylon Insert	1
13	952-002-007	Flat Washer, 5/8 Inch	3	32	951-005-037	Lock Nut 3/4-10, 2-Way	1
14	10304	Lock Nut 1/2-13, 2-Way	2	33	950-001-142	Hex Head Cap Screw 1/2-13 x 3 1/2 Gr. 5	1
15	953-002-031	Clevis Pin 3/4 x 2 Gr. 5	2	34	25011048	Upper Link Spacer	1
16	950-001-309	Hex Head Cap Screw 1/2-13 x 4 Gr. 5, 7/8 Thd Lgth	1	35	952-001-007	Lock Washer, 3/8 Inch	2
17	25012792	RH Light Assembly (See Sec. 6 Page 14)	1	36	950-001-089	Hex Head Cap Screw 3/8-16 x 3/4 Gr. 5	2
18	950-003-070	Carriage Bolt 3/8-16 x 2 Gr. 5	4	37	25011581	1 1/2 x 9 SA Cylinder (See Sec. 6, Page 9)	1
19	951-005-003	Lock Nut 3/8-16 Mac Lock	4	38	25011986	Stop Plate Kit (Includes Lock Nut #32)	1
20	25011334	Light Bracket Weldment	2	39	25011984	Stop Plate	1
21	25012793	LH Light Assembly (See Sec. 6 Page 14)	1	40	25011885	Bushing	1
22	25012649	Power Unit (See Sec. 6 Page 10)	1	41	033-12013	SAE Flat Washer, 3/4 Inch	1
23	25010114	Lower Link Spacer	1				

POWER UNIT COVER ASSEMBLY

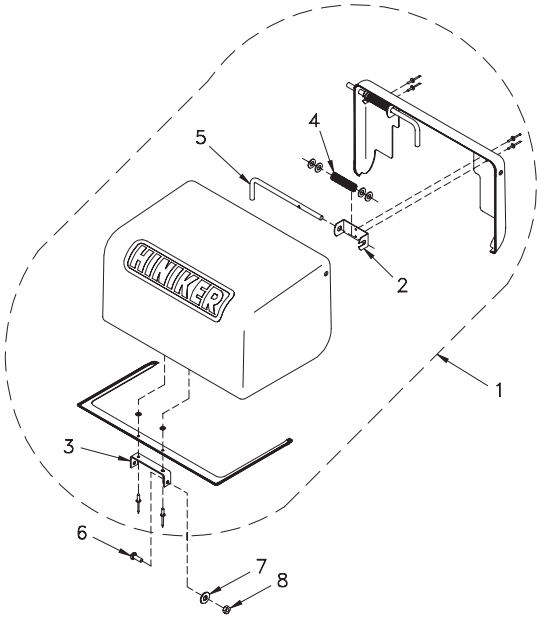

DWG. NO. 5559

REF. NO.	PART NUMBER	DESCRIPTION	QTY.	REF. NO.	PART NUMBER	DESCRIPTION	QTY.
1	25011070	Cover Assembly (Includes Items 2-5)	1	5	25011071	Rod	2
2	25011073	Clevis	2	6	031-10657	Machine Screw 1/4-20 x 3/4 Slotted Round Head	2
3	25011072	Clevis	1	7	952-002-011	Flat Washer 1/4 Inch	2
4	25010717	Compression Spring	2	8	060954	Lock Nut 1/4-20 Nylon Insert	2

POLY SNOW DEFLECTOR KITS

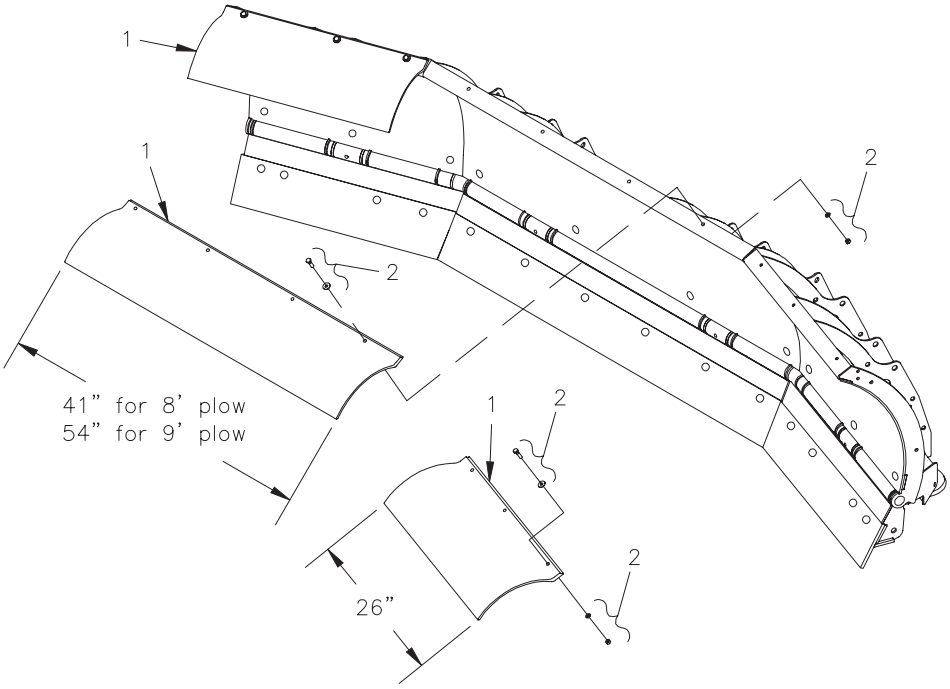

25011789 Poly Snow Deflector Kit For 8 Ft. Plows
25011983 Poly Snow Deflector Kit For 9 Ft. Plows

DWG. NO. 5681

REF. NO.	PART NUMBER	DESCRIPTION	QTY.	REF. NO.	PART NUMBER	DESCRIPTION	QTY.
1	25011794	8 Ft. Snow Deflector Extrusion	1	2	25011793	Bolt Box Snow Deflector	1
	25011982	4 1/2 Ft. Snow Deflector Extrusion	2				

1/2” THICK CUTTING EDGES

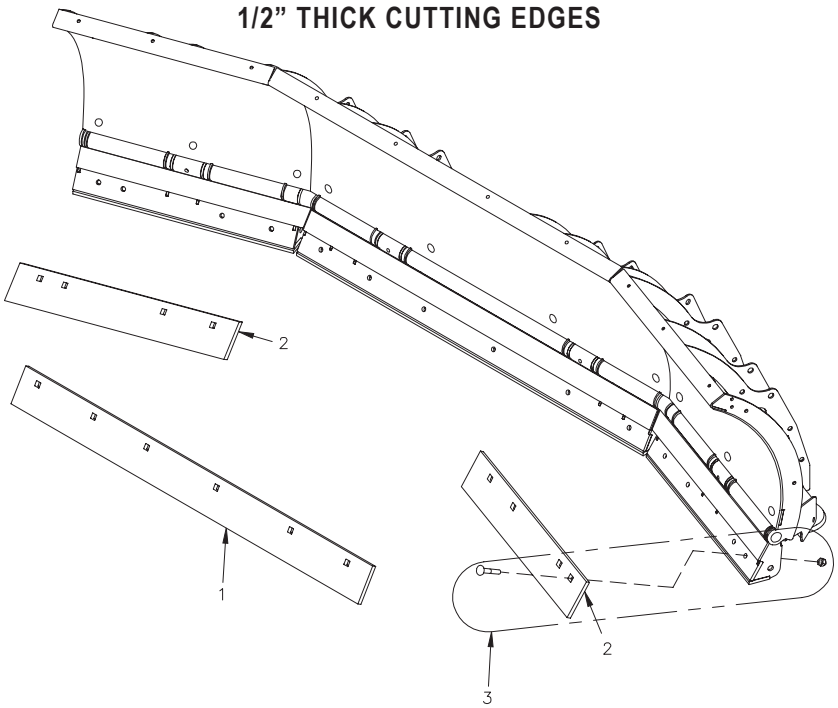

DWG. NO. 5882

REF. NO.	PART NUMBER	DESCRIPTION	QTY.	REF. NO.	PART NUMBER	DESCRIPTION	QTY.
1	25012032	Middle Cutting Edge 9’ Plow	1	2	25012030	Scoop End Cutting Edge	2
	25012028	Middle Cutting Edge 8’ Plow	1	3	25011578	Cutting Edge Bolt Kit	1

RUBBER CUTTING EDGES

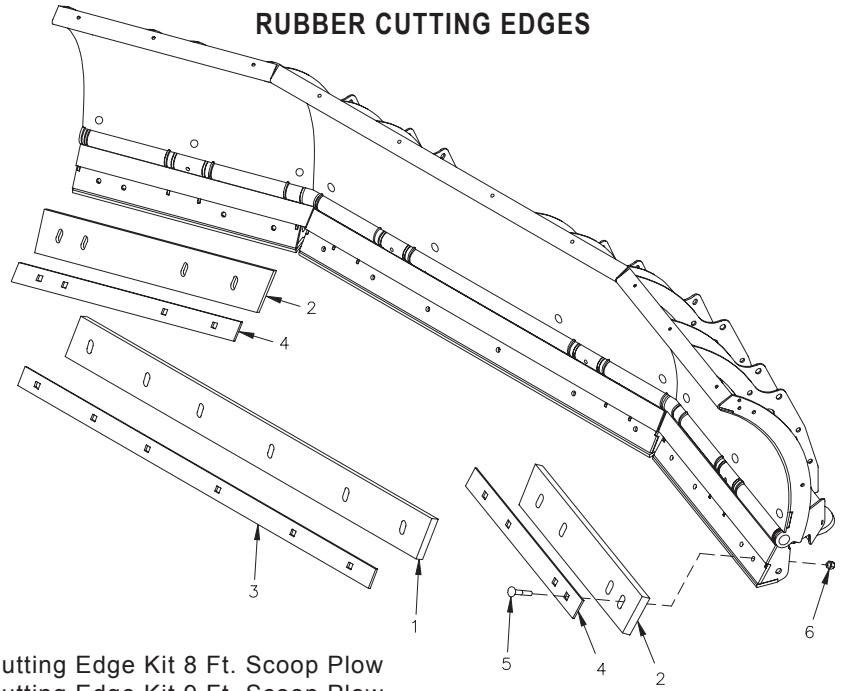

25011776 Rubber Cutting Edge Kit 8 Ft. Scoop Plow
25011782 Rubber Cutting Edge Kit 9 Ft. Scoop Plow

DWG. NO. 5736

REF. NO.	PART NUMBER	DESCRIPTION	QTY.	REF. NO.	PART NUMBER	DESCRIPTION	QTY.
1	25011783	Rubber Cutting Edge 9 Ft. Middle	1	4	25011781	Strap Scoop End	2
	25011777	Rubber Cutting Edge 8 Ft. Middle	1	5	030-16136	Carriage Bolt 1/2-13 x 2 1/2 Gr. 5	A/R
2	25011778	Rubber Cutting Edge Scoop End	2	6	951-003-009	Hex Nut 1/2 Nylon Insert #5	A/R
3	25011785	Strap 9 Ft. Scoop Middle	1				
	25011780	Strap 8 Ft. Scoop Middle	1				

WEAR PLATE KIT

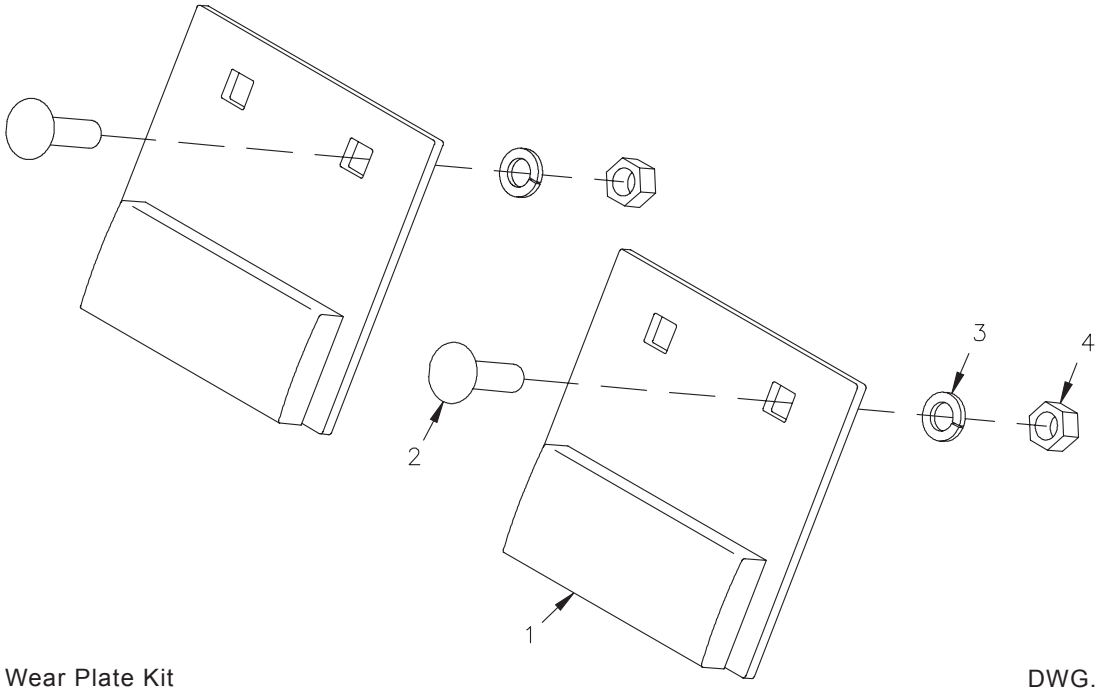

25012587 Wear Plate Kit

DWG. NO. 6331

REF. NO.	PART NUMBER	DESCRIPTION	QTY.	REF. NO.	PART NUMBER	DESCRIPTION	QTY.
1	25012588	Wear Plate Weldment	2	3	952-001-004	Lock Washer 1/2 Inch	4
2	950-003-058	Carriage Bolt 1/2-13 x 1 3/4 Gr. 5	4	4	951-001-007	Hex Nut 1/2-13	4

CURB GUARD KITS

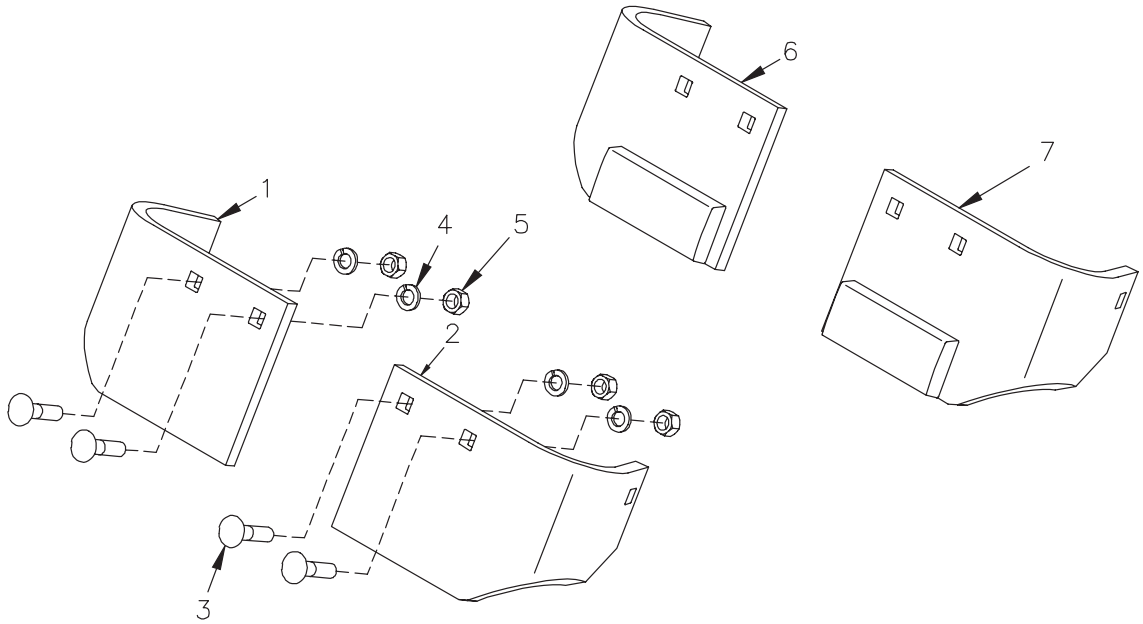

25011695 Curb Guard Kit - Standard
25012726 Curb Guard Kit With Wear Bars

DWG. NO. 5486

REF. NO.	PART NUMBER	DESCRIPTION	QTY.	REF. NO.	PART NUMBER	DESCRIPTION	QTY.
1	25011712	RH Curb Guard - Standard	1	5	951-001-007	Hex Nut 1/2-13	4
2	25011713	LH Curb Guard - Standard	1	6	25012722	RH Curb Guard With Wear Bar	1
3	950-003-025	Carriage Bolt 1/2-13 x 2 Gr. 5	4	7	25012723	LH Curb Guard With Wear Bar	1
4	952-001-004	Lock Washer 1/2 Inch	4				

HYDRAULIC OVERVIEW

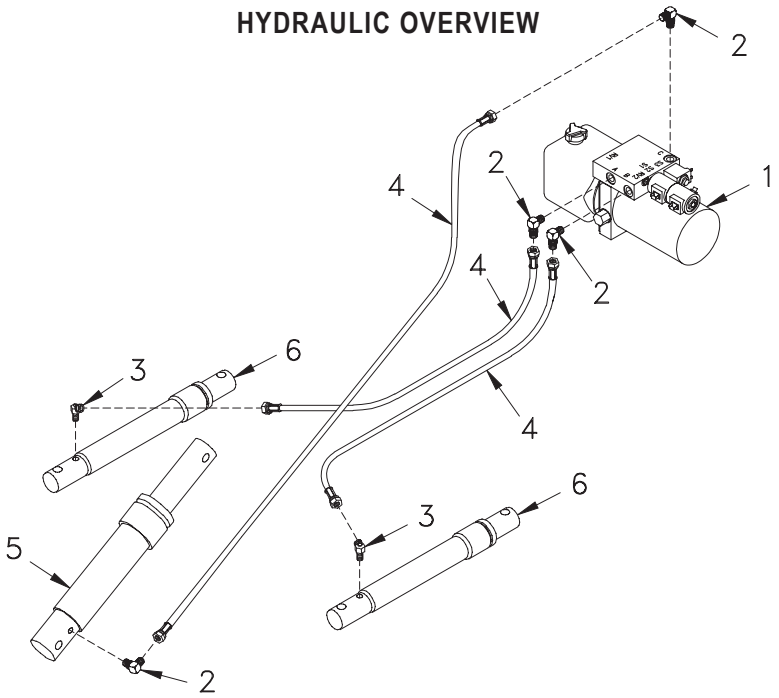

DWG. NO. 3460

REF. NO.	PART NUMBER	DESCRIPTION	QTY.	REF. NO.	PART NUMBER	DESCRIPTION	QTY.
1	25012649	Power Unit	1	4	957-010-005	Hydraulic Hose Assembly 1/4 x 32”	3
2	956-005-022	90° Adapter 9/16 ORB x 9/16 JIC	4	5	25011581	1 1/2 x 9 Cylinder	1
3	956-005-023	45° Adapter 9/16 ORB x 9/16 JIC	2	6	25010523	1 1/2 x 10 Cylinder	2

HYDRAULIC CYLINDERS

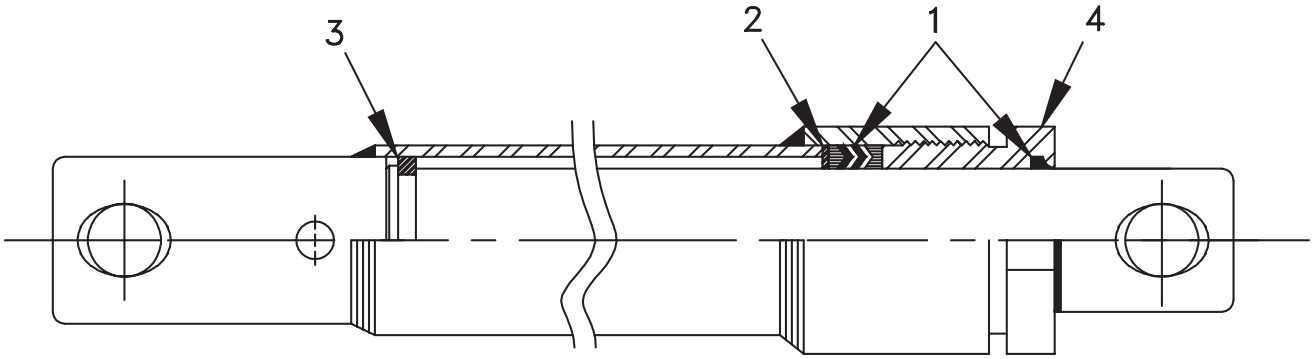

25010523 1 1/2 x 10 Cylinder
25011581 1 1/2 x 9 Cylinder

DWG. NO. 3706

REF. NO.	PART NUMBER	DESCRIPTION	QTY.	REF. NO.	PART NUMBER	DESCRIPTION	QTY.
1	25010464	Seal Kit	1	3	25010017	Guide Ring	1
2	25010016	Seat Ring	1	4	25010018	Packing Nut	1

POWER UNIT - SPX MODEL DB-7929-2

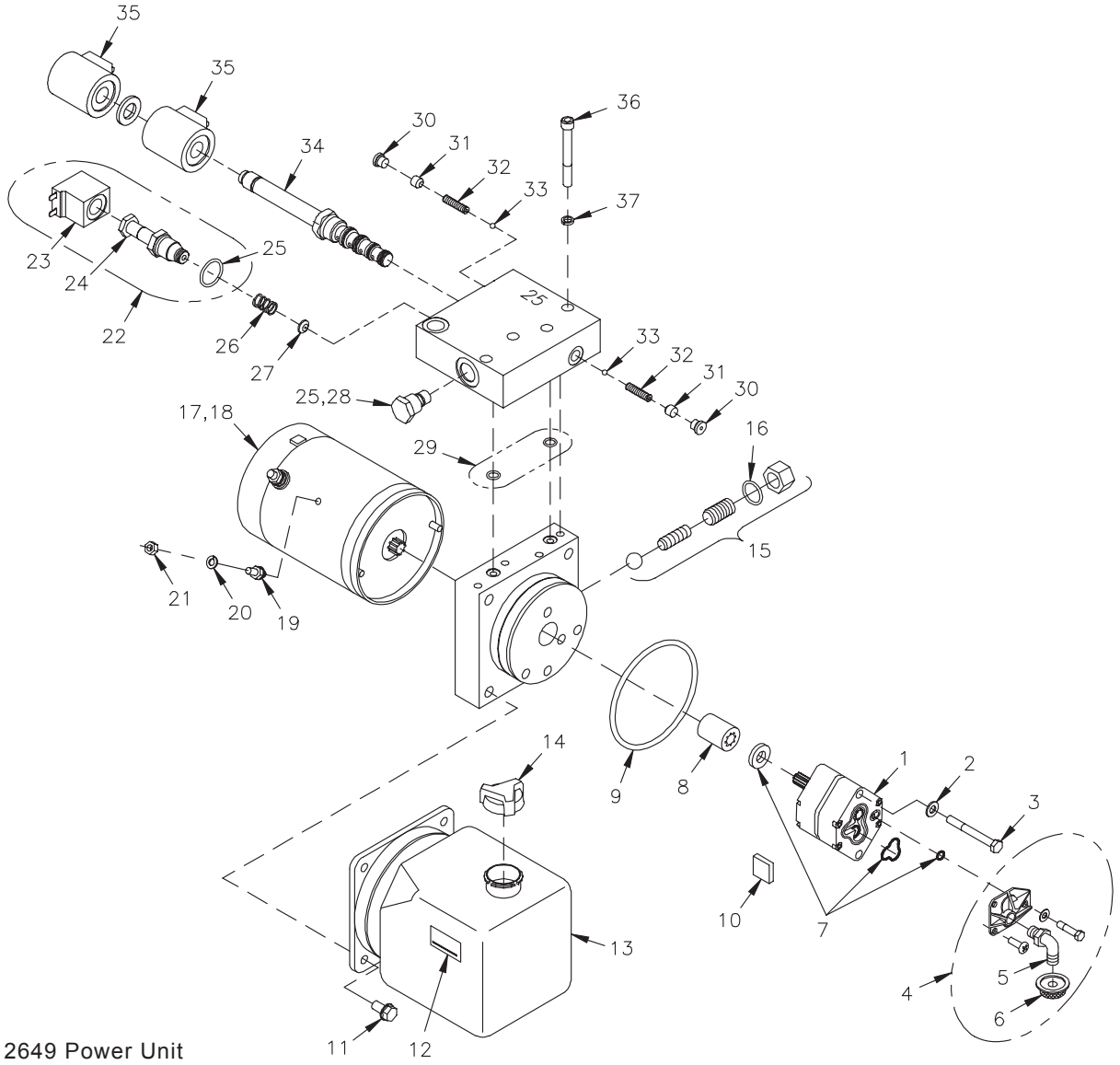

25012649 Power Unit
Model No. DB-7929-2

DWG.NO. 6527

REF. NO.	PART NUMBER	DESCRIPTION	QTY.	REF. NO.	PART NUMBER	DESCRIPTION	QTY.
1	25011706	Pump Assembly	1	20	952-001-001	Lock Washer 1/4 Inch	1
2	033-12007	SAE Flat Washer, 5/16 Inch	2	21	951-001-003	Hex Nut 1/4-20	1
3	950-001-327	Hex Head Cap Screw 5/16-24 x 3 Gr. 8	2	22	25011654	Release Valve Kit, Double Spade Coil	1
4	25010332	Inlet Plumbing Kit	1	23	25011667	Solenoid Coil 10V DC	1
5	25010244	Plumbing Elbow	1	24	25010544	Cartridge Release Valve	1
6	25010221	Filter	1	25	25010992	O-Ring Kit	1
7	25010334	Pump O-Ring Kit	1	26	25012674	Spring	1
8	25010214	Coupling	1	27	25012677	Return Orifice	1
9	25010236	O-Ring	1	28	25010746	Check Valve	1
10	25010220	Plumbing Magnet	1	29	25010762	Manifold O-Ring Kit	1
11	950-004-071	Machine Screw #12-24 x 1/2 - Hex Washer Head	4	30	25012686	ORB Plug	2
12	25010436	Decal - Fill Line	1	31	25012685	Set Screw 3/8-24 x .38 Selflock	2
13	25010240	Plastic Tank	1	32	25012684	Spring	2
14	25010217	Plastic Breather	1	33	25012683	Ball .25 Dia. Steel	2
15	25010330	Adjustable Relief Valve Kit	1	34	25012688	Directional Valve	1
16	25010518	Adjustable Relief Valve O-Ring	1	35	25012687	Solenoid Coil 10V DC	2
17	25010230	Motor 12V DC	1	36	950-004-115	Socket Head Cap Screw W/Thread Lock 1/4-20 x 1 3/4	4
18	25010337	Motor Brush Kit	1	37	952-004-080	Lock Washer 1/4 x .363 O.D.	4
19	25012673	Ground Stud	1				

POWER UNIT - SPX MODEL DB-1600

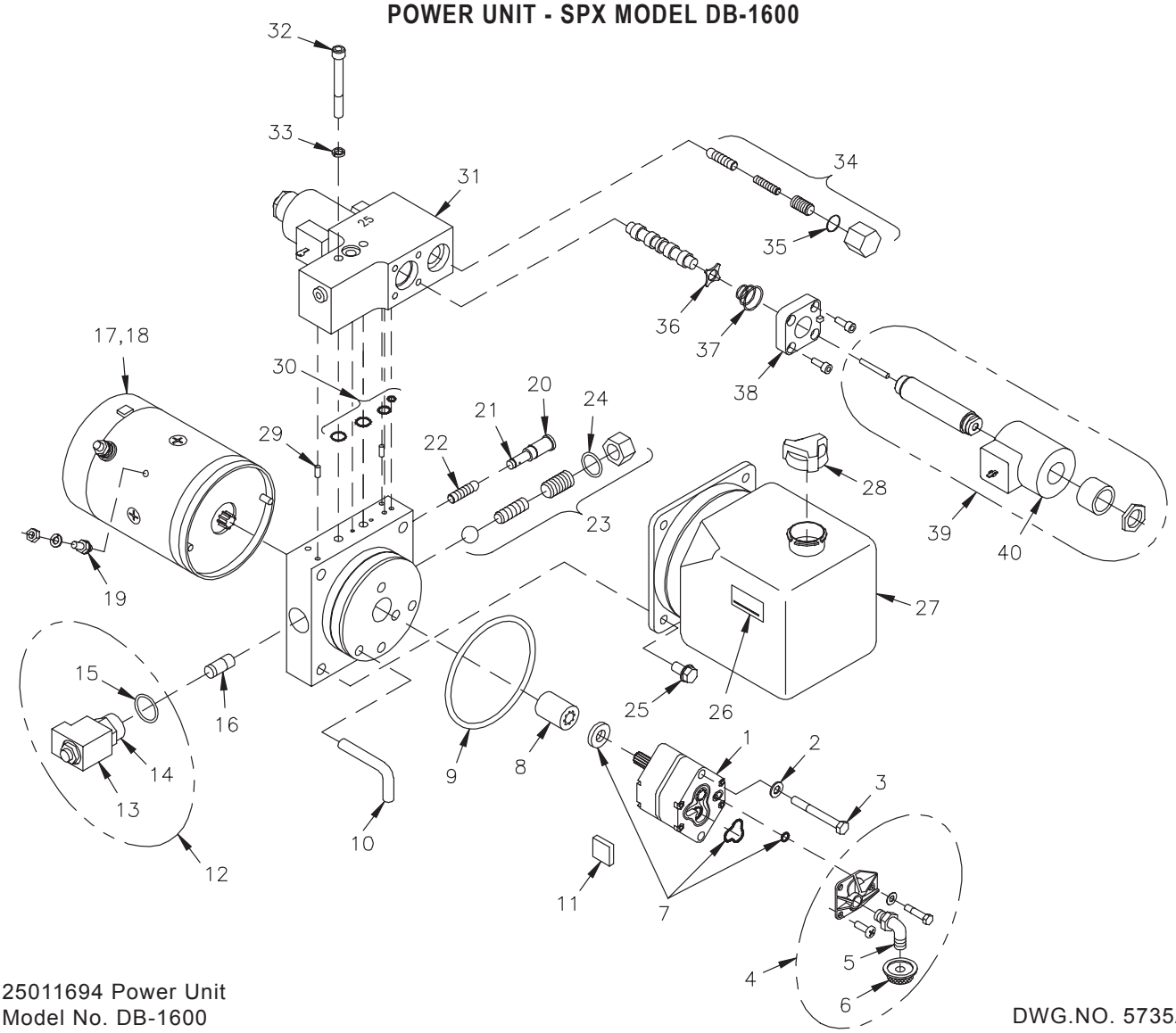

25011694 Power Unit
Model No. DB-1600

DWG.NO. 5735A

REF. NO.	PART NUMBER	DESCRIPTION	QTY.	REF. NO.	PART NUMBER	DESCRIPTION	QTY.
1	25011706	Pump Assembly	1	20	25010228	Check Valve Assembly	1
2	033-12007	Sae Flat Washer, 5/16 Inch	2	21	25010477	Check Valve O-Ring Kit	1
3	950-001-327	Hex Head Cap Screw 5/16-24 x 3 Gr. 8	2	22	25010241	Spring & Ball Assembly	1
4	25010332	Inlet Plumbing Kit	1	23	25010330	Adjustable Relief Valve Kit	1
5	25010244	Plumbing Elbow	1	24	25010518	Adjustable Relief Valve O-Ring	1
6	25010221	Filter	1	25	950-004-071	Machine Screw #12-24 x 1/2 - Hex Washer Head	4
7	25010334	Pump O-Ring Kit	1	26	25010436	Decal - Fill Line	1
8	25010214	Coupling	1	27	25010240	Plastic Tank	1
9	25010236	O-Ring	1	28	25010217	Plastic Breather	1
10	25010549	Return Tube	1	29	25010235	Pin 1/8 x 1/4	3
11	25010220	Plumbing Magnet	1	30	25010335	Directional Valve O-Ring Kit	1
12	25011654	Release Valve Kit, Double Spade Coil	1	31	25010533	U-Valve Assembly	1
	25011920	Release Valve Kit, Double Spade W/ Ground Wire	1	32	950-004-114	Socket Head Cap Screw W/Thread Lock 1/4-20 x 2 1/8	2
13	25011667	Solenoid Coil, Double Spade	1	33	952-004-080	Lock Washer 1/4 x .363 O.D.	2
	25011917	Solenoid Coil, Double Spade W/Ground Wire	1	34	25010336	Crossover Relief Valve Kit	2
14	25010544	Cartridge Release Valve	1	35	25010519	Crossover Relief Valve O-Ring	2
15	25010992	O-Ring Kit	1	36	25012636	Shim	2
16	25010542	Flow Control Valve	1	37	25012637	Spring	2
17	25010230	Motor 12V DC	1	38	25012639	Mount Block With O-Ring	2
18	25010337	Motor Brush Kit	1	39	25010333	Directional Valve Coil Kit	2
19	25012673	Ground Stud	1	40	25010541	Coil	2

UNDERHOOD WIRING HARNESS

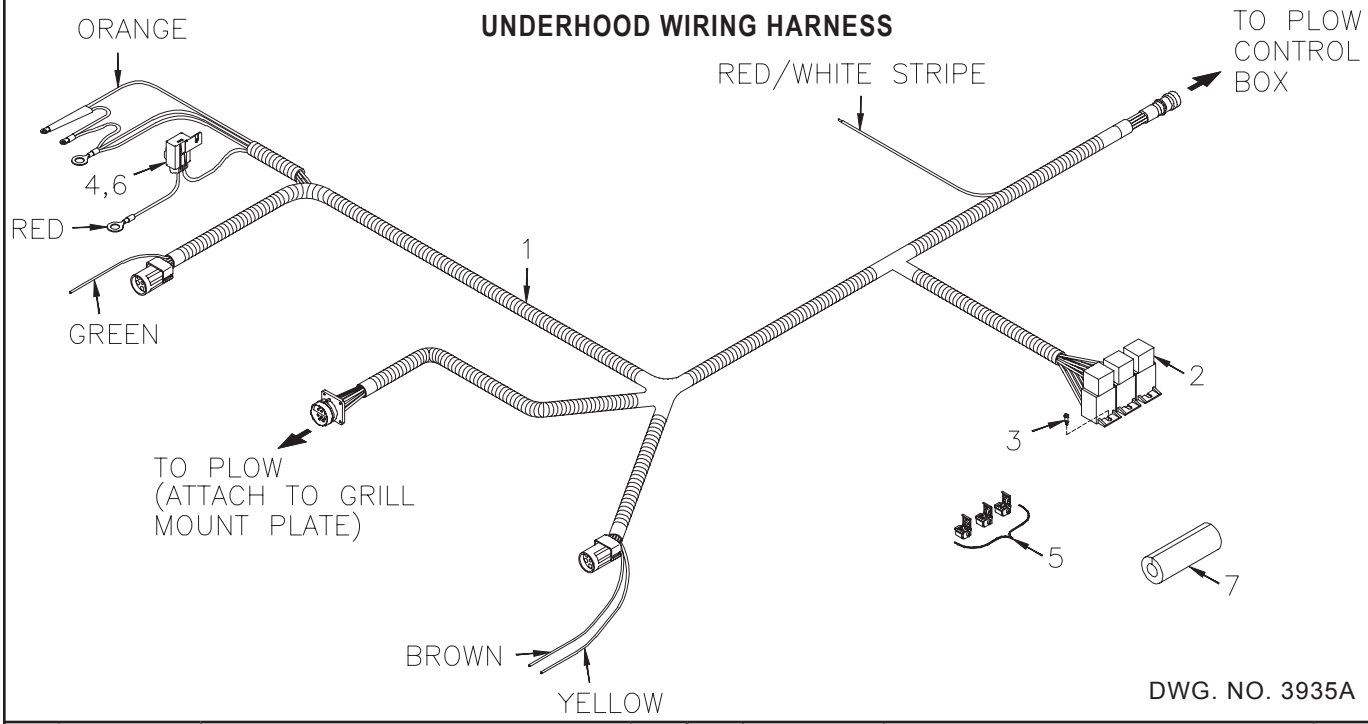

DWG. NO. 3935A

REF. NO.	PART NUMBER	DESCRIPTION	QTY.	REF. NO.	PART NUMBER	DESCRIPTION	QTY.
1	38813034	Underhood Snowplow Cable Assembly (Includes Relays & Fuse)	1	4	39207031	10 Amp Fuse	1
				5	38610104	Sealed Wire Tap Connector	3
2	38350010	Headlight/Accessory Relay	3	6	38400012	Cover, Fuse Holder	1
3	031-30078	S-Tap Screw #8-18 x 1/2 Slotted Hex Head	3	7	39107001	Foam Grommet 4” Long	1

MOTOR SOLENOID

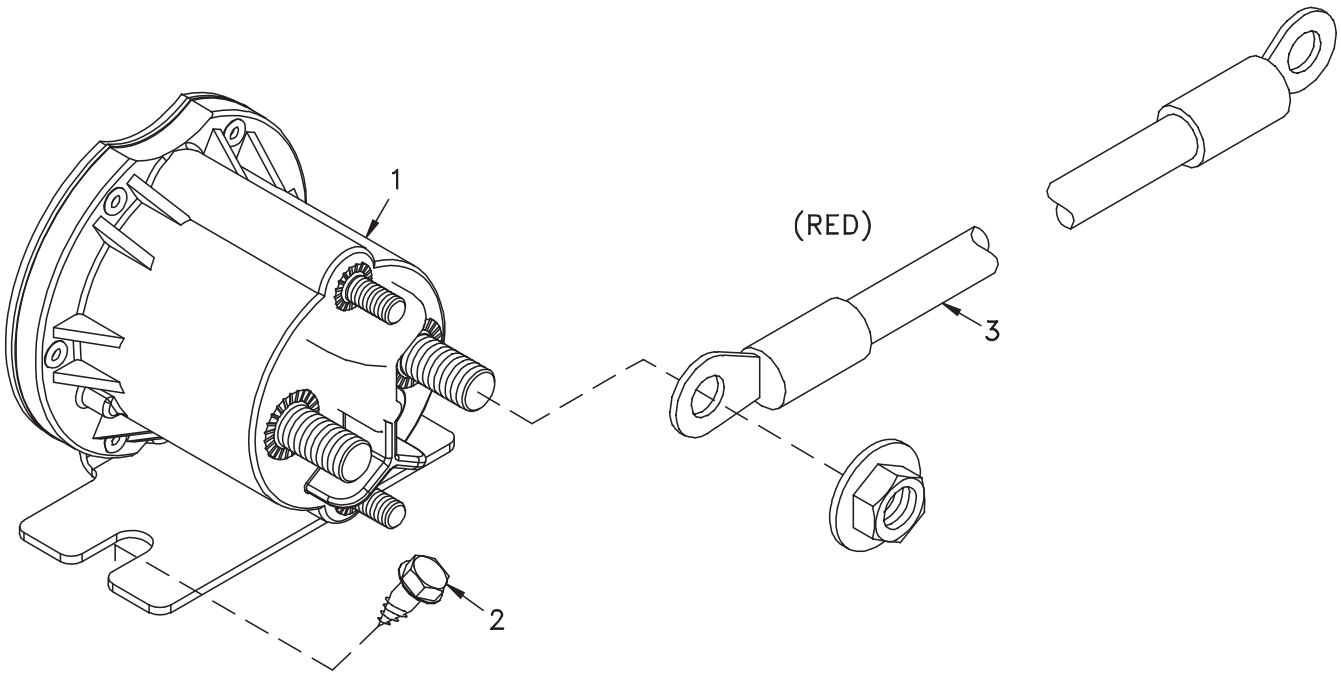

DWG. NO. 6559

REF. NO.	PART NUMBER	DESCRIPTION	QTY.	REF. NO.	PART NUMBER	DESCRIPTION	QTY.
1	38350015	Motor Solenoid, Sealed	1	3	38813012	Solenoid Cable, Red	1
2	950-005-004	Self Tapping Screw 1/4-20 x 1/2 Hex Washer Head	2				

PLOW WIRING HARNESS

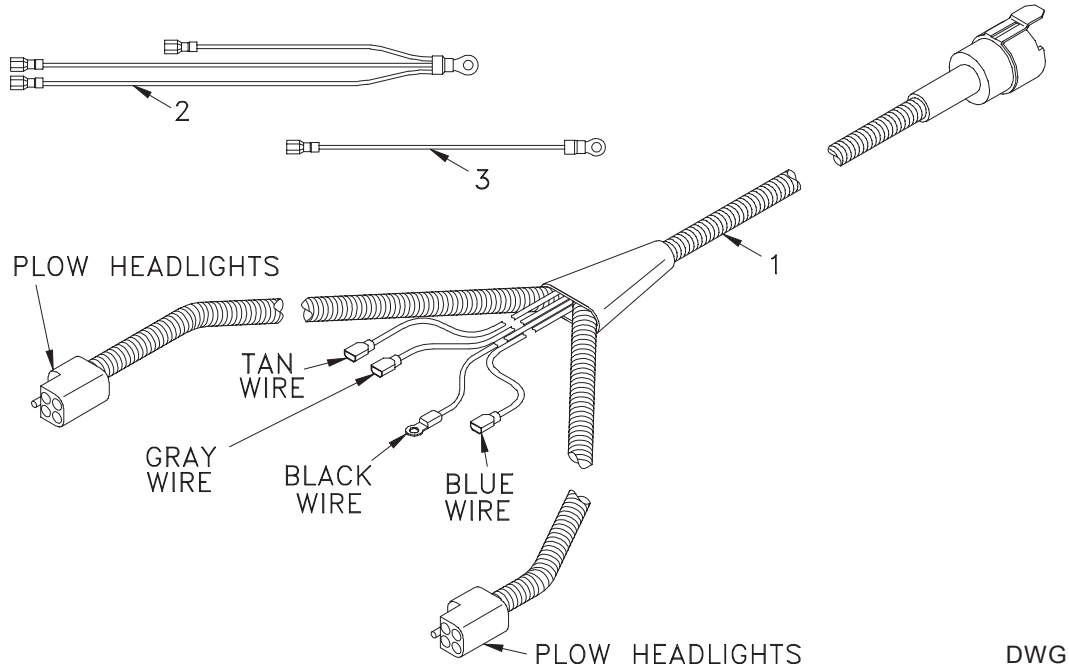

DWG. NO. 6558

REF. NO.	PART NUMBER	DESCRIPTION	QTY.	REF. NO.	PART NUMBER	DESCRIPTION	QTY.
1	38813036	External Cable Assembly - Snow Plow	1	3	38813069	Ground Wire (Use On Power Unit DB-1600)	1
2	38813094	Ground Wire (Use On Power Unit DB-7929-2)	1				

JOYSTICK CONTROLLER

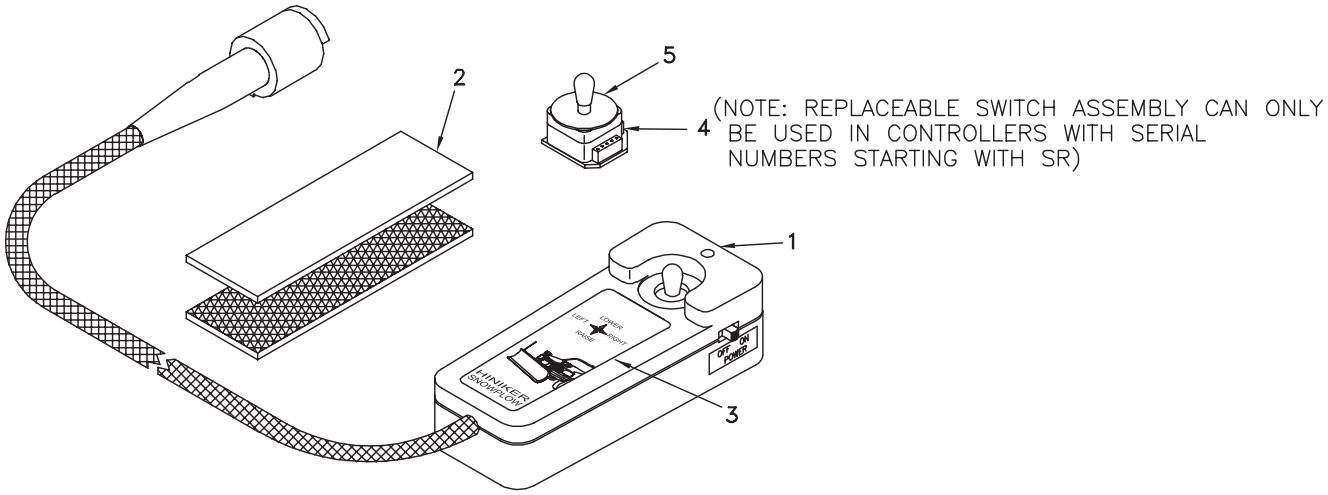

DWG. NO. 5925

REF. NO.	PART NUMBER	DESCRIPTION	QTY.	REF. NO.	PART NUMBER	DESCRIPTION	QTY.
1	36014020	Joystick Straight W/Replaceable Switch	1	4	36014019	Replaceable Switch Assembly	1
2	39108005	Hook & Loop Assembly	1	5	36716033	Gasket	1
3	39302141	Decal, Straight Plow Joystick, 2 Sided	1				

COMPOSITE HEADLAMPS

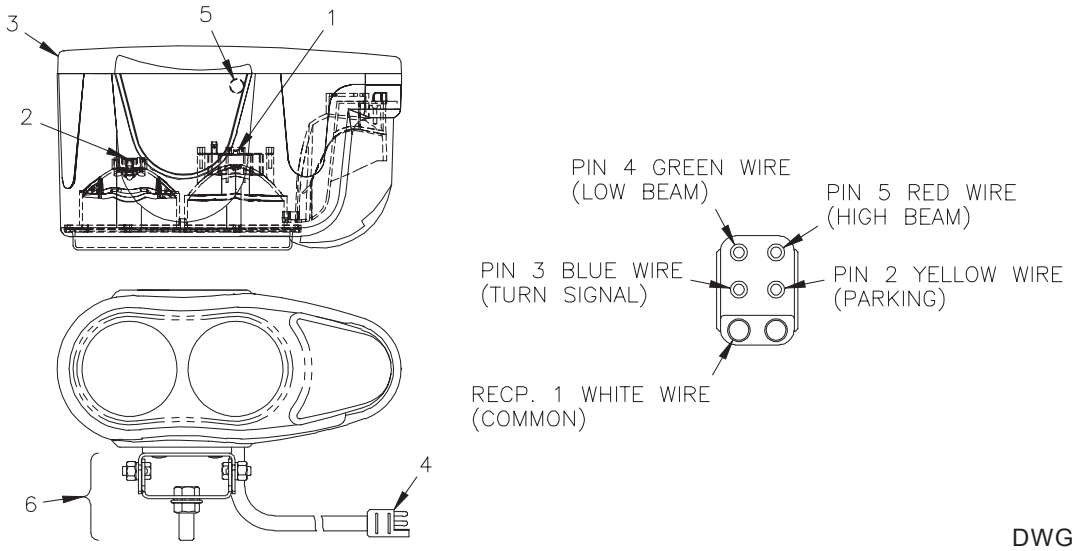

DWG. NO. 6628

REF. NO.	PART NUMBER	DESCRIPTION	QTY.	REF. NO.	PART NUMBER	DESCRIPTION	QTY.
	25012793	LH Light Assembly	1	5	25012417	Conduit Clamp	1
	25012792	RH Light Asembly	1	6	25012794	Mounting Hardware Kit	1
1	25012416	Spring Clip, High Beam	1		N/A	High Beam Headlight Bulb - One #H1 12V, 55W	1
2	25012415	Spring Clip, Low Beam	1		N/A	Low Beam Headlight Bulb - One #H7 12V, 55W	1
3	25012414	Back Panel, LH Light	1		N/A	Turn Signal/Parking Bulb - One #1157 Heavy	1
	25012419	Back Panel, RH Light	1			Duty Double Contact 32/3 C.P.	
4	25012418	Wire Harness	1				

SEALED BEAM HEADLAMPS

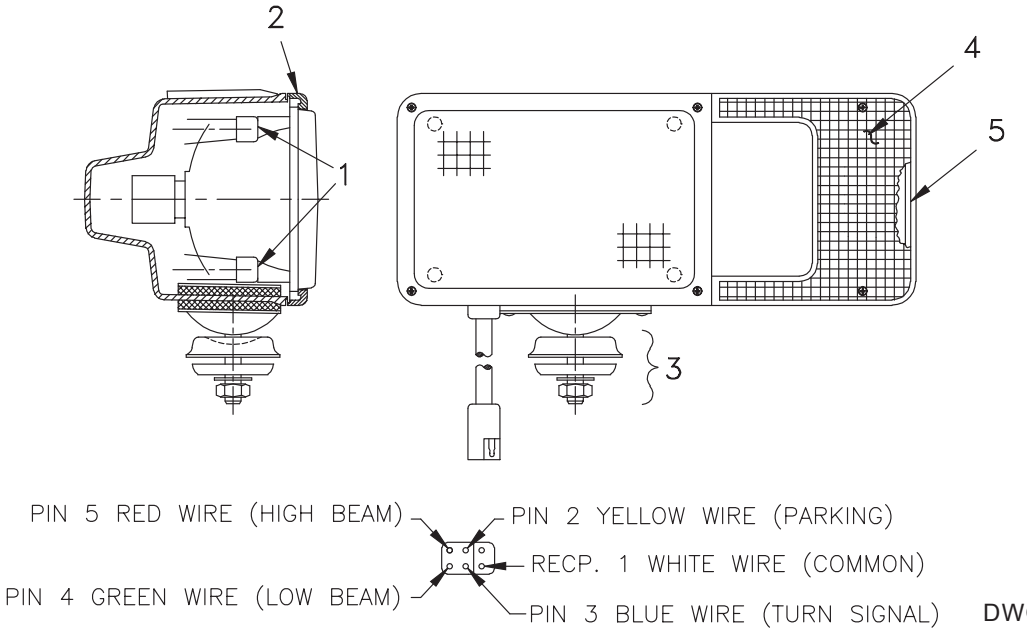

DWG. NO. 3893

REF. NO.	PART NUMBER	DESCRIPTION	QTY.	REF. NO.	PART NUMBER	DESCRIPTION	QTY.
	25010918	LH Light Assy (5 Pin Connector)		5	25010731	Head Lamps Lens Gasket	1
	25010919	RH Light Assy (5 Pin Connector)			N/A	Sealed Beam - HP6545 12VDC	1
1	25010727	Head Lamp Bumper	4			4.00” x 6.50” (100 mm x 165 mm)	
2	25010728	Head Lamp Rim	1			Rectangular Hi/Lo (65W/45W)	
3	25010729	Head Lamp Swivel Kit	1		N/A	Turn Signal/Park Bulb One #1157 Heavy Duty	1
4	25010730	Head Lamp Lens	1			Double Contact 32/3 C.P.	

POWER CABLES

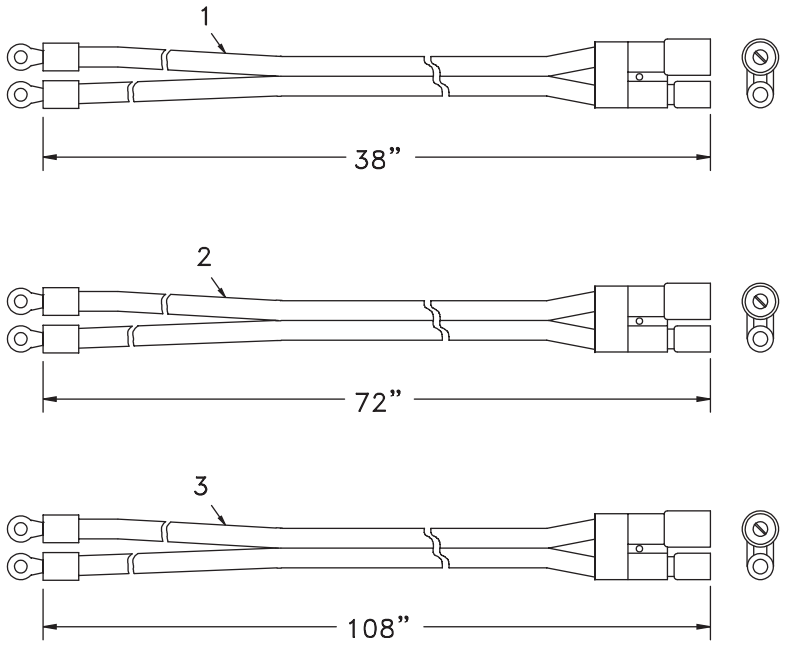

DWG. NO. 5342

REF. NO.	PART NUMBER	DESCRIPTION	QTY.	REF. NO.	PART NUMBER	DESCRIPTION	QTY.
1	38812008	Battery Power Cable - Snow Plow	1	3	38813066	Battery Power Cable - Truck 9 Ft.	1
2	38813007	Battery Power Cable - Truck 6 Ft.	1				

GRILL MOUNT PLATE

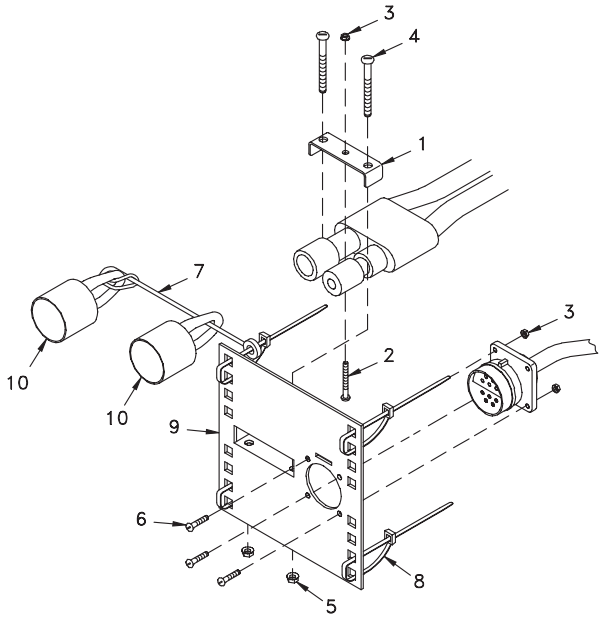

DWG. NO. 3900A

REF. NO.	PART NUMBER	DESCRIPTION	QTY.	REF. NO.	PART NUMBER	DESCRIPTION	QTY.
	25010512	Complete Mount Plate Kit (Items 1-10)		6	950-004-033	Machine Screw #6-32 x 1/2 Slotted Pan Head	4
1	25011037	Clamp	1	7	36716025	Nylon Lanyard 8”	1
2	700-10904	Machine Screw #6-32 x 1 Slotted Pan Head	1	8	367-001-011	Cable Tie 14”	4
3	951-003-014	Lock Nut #6-32 Nylon Insert	5	9	25010278	Plug Mount Plate	1
4	950-004-076	Machine Screw #10-24 x 1 1/2 Slotted Pan Head	2	10	36716002	Dust Cap	2
5	392-010-010	Lock Nut #10-24 Nylon Insert	2				